PURE EV

PURE EV PARTS MANUAL

REV. 4/18/2024

change log

Date	content

C727.2/2+2/2G/2+2G

Chassis frame(1)

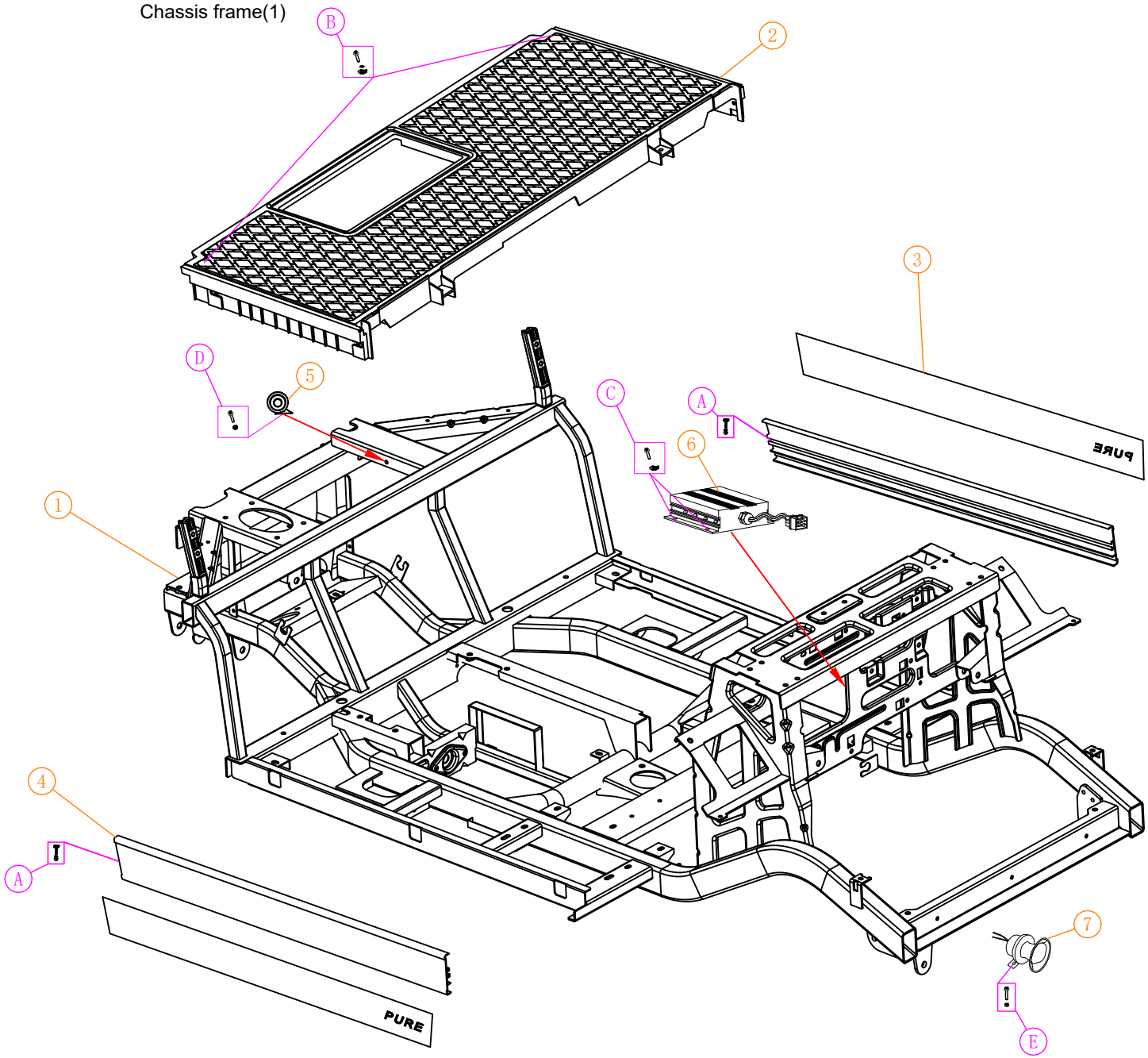

screw specifications

NO:	Code	Name	QTY	Remark
A	HW-ECHD304	(M6*50) All sides screw	4	
	HW-223-IC	(6mm) Flange self-locking nut	4	
	HW-222-IC	(1.5*6.5*26) Flat gasket	4	
B	HW-219-IC	(6*16) Flange screw	2	
	HW-222-IC	(1.5*6.5*26) Flat gasket	2	
	HW-210-IC	(M6) Clip nut	2	
C	HW-219-IC	(6*16) Flange screw	2	
	HW-210-IC	(M6) Clip nut	2	
D	HW-204-IC	(6*45) Flange screw	1	
	HW-223-IC	(6mm) Flange self-locking nut	1	
E	HW-219-IC	(6*16) Flange screw	1	
	HW-220-IC	(6mm) Flange self-locking nut	1	

C727.2/2+2/2G/2+2G

Chassis frame(1)

NO:	Code	Name	QTY	Remark
1	CHSS-901-PR	C727.2 chassis frame	1	C727.2/2+2
	CHSS-902-PR	C727.2G chassis frame	1	C727.2G/2+2G
2	BD-156-PR	C727.2 front baseplate	1	
3	BD-157-PR	C727.2 edge protector sticker	2	
4	BD-158-PR	C727.2 Side guard	2	
5	ELE-701-IC	12V Fanfare horn	1	
6	BD-159-PR	DC/DC convertor	1	13.8V/500W
7	ELE-708-IC	S14 Reversing voice buzzer	1	
		1		

C727.4/4+2/4G/4+2G

Chassis frame(2)

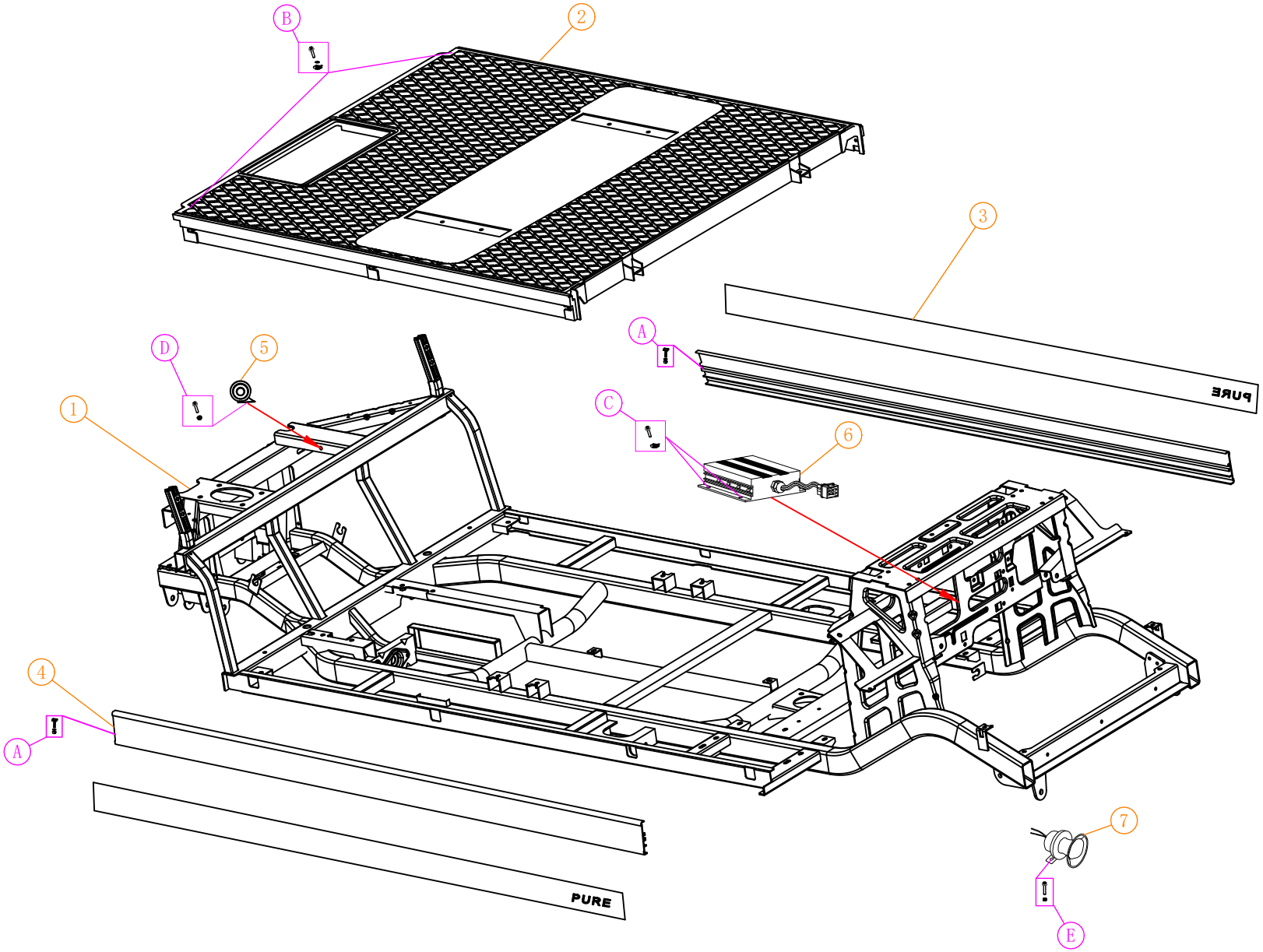

screw specifications

NO:	Code	Name	QTY	Remark
A	HW-ECHD304	(M6*50) All sides screw	6	
	HW-223-IC	(6mm) Flange self-locking nut	6	
	HW-222-IC	(1.5*6.5*26) Flat gasket	6	
B	HW-219-IC	(6*16) Flange screw	2	
	HW-222-IC	(1.5*6.5*26) Flat gasket	2	
	HW-210-IC	(M6) Clip nut	2	
C	HW-219-IC	(6*16) Flange screw	2	
	HW-210-IC	(M6) Clip nut	2	
D	HW-204-IC	(6*45) Flange screw	1	
	HW-223-IC	(6mm) Flange self-locking nut	1	
E	HW-219-IC	(6*16) Flange screw	1	
	HW-220-IC	(6mm) Flange self-locking nut	1	

C727.4/4+2/4G/4+2G

Chassis frame(2)

NO:	Code	Name	QTY	Remark
1	CHSS-903-PR	C727.4 chassis frame	1	C727.4/4+2
	CHSS-904-PR	C727.4G chassis frame	1	C727.4G/4+2G
2	BD-199-PR	C727.4 front baseplate	1	
3	BD-200-PR	C727.2 edge protector sticker	1	
4	BD-201-PR	C727.4 Side guard	2	
5	ELE-701-IC	12V Fanfare horn	1	
6	BD-159-PR	AC/DC convertor	1	13.8V/500W
7	ELE-708-IC	S14 Reversing voice buzzer	1	

C727.2G/2+2G

Side step parts(1)

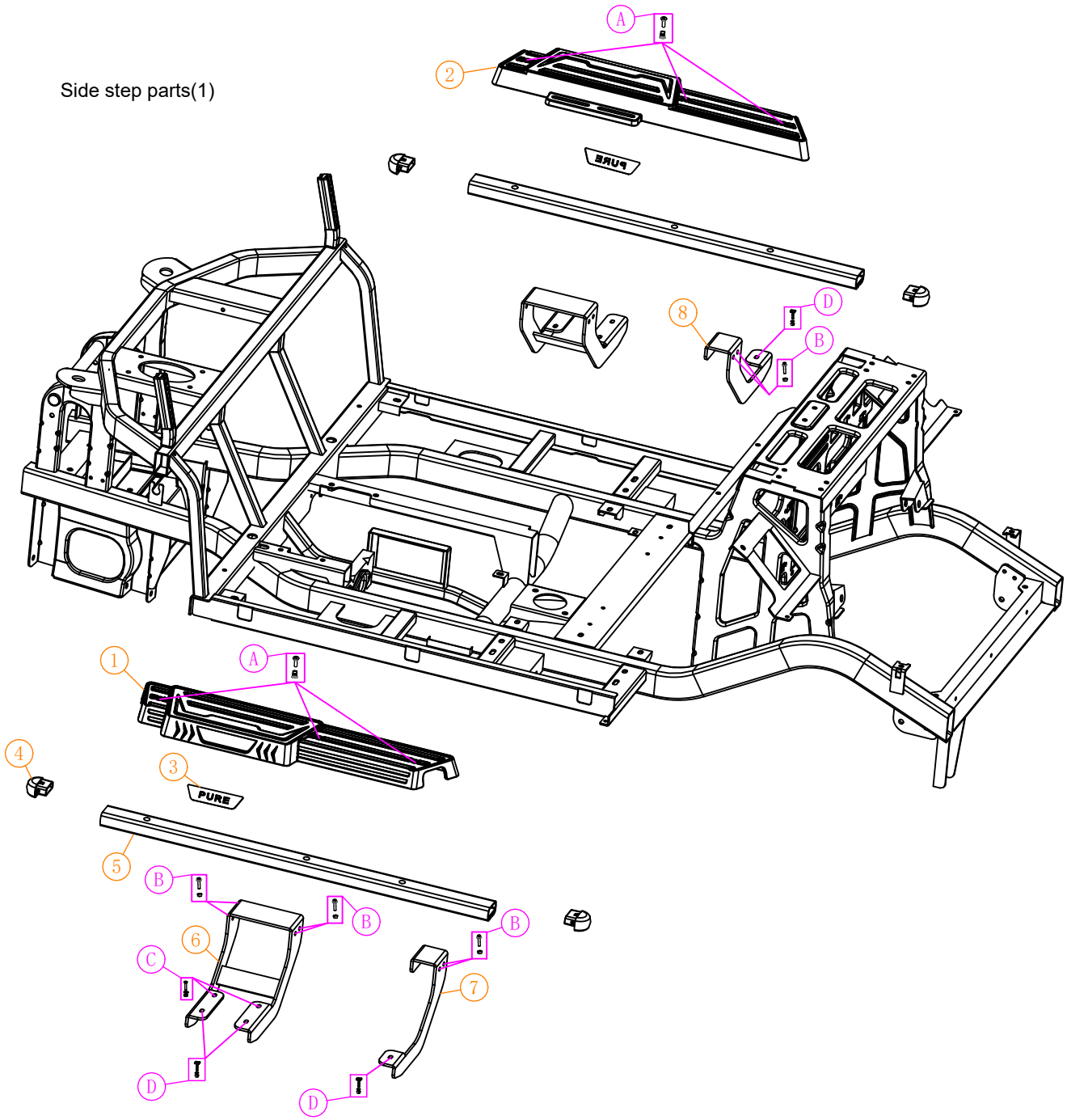

screw specifications

NO:	Code	Name	QTY	Remark
A	HW-717-PR	（6*25）Stainless steel large flat round head cross screw	6	
	HW-718-PR	(M6) Rivet nut	6	
B	HW-212-IC	(8*25) Flange screw	12	
	HW-205-IC	(M8) Flange self-locking nut	12	
C	HW-719-PR	（6*30） Hexagonal stainless steel screw	4	
	HW-720-PR	（1.0*6*12） Flat gasket	4	
	HW-310-IC	(M6) Stainless steel nut	4	
D	HW-ECHD304	(M6*50) All sides screw	6	
	HW-223-IC	(6mm) Flange self-locking nut	6	
	HW-222-IC	（1.5*6.5*26） Flat gasket	6	

C727.2G/2+2G

Side step parts(1)

NO:	Code	Name	QTY	Remark
1	NB-401-PR	C727 Side pedal-L(Driver)	1	Injection parts Optional
2	NB-402-PR	C727 Side pedal-R(Passenger)	1	Injection parts Optional
3	NB-403-PR	C727 side pedal logo(PURE)	2	Optional
4	NB-404-PR	Side step installation pipe plug cover	4	Injection parts Optional
5	NB-405-PR	C727.2G Side step installation pipe	2	Optional
6	NB-406-PR	C727 Side step front bracket	2	Optional
7	NB-407-PR	C727 Side step rear bracket-L(Driver)	1	Optional
8	ELE-708-IC	C727 Side step rear bracket-R(Passenger)	1	Optional

C727.4G/4+2G

Side step parts(2)

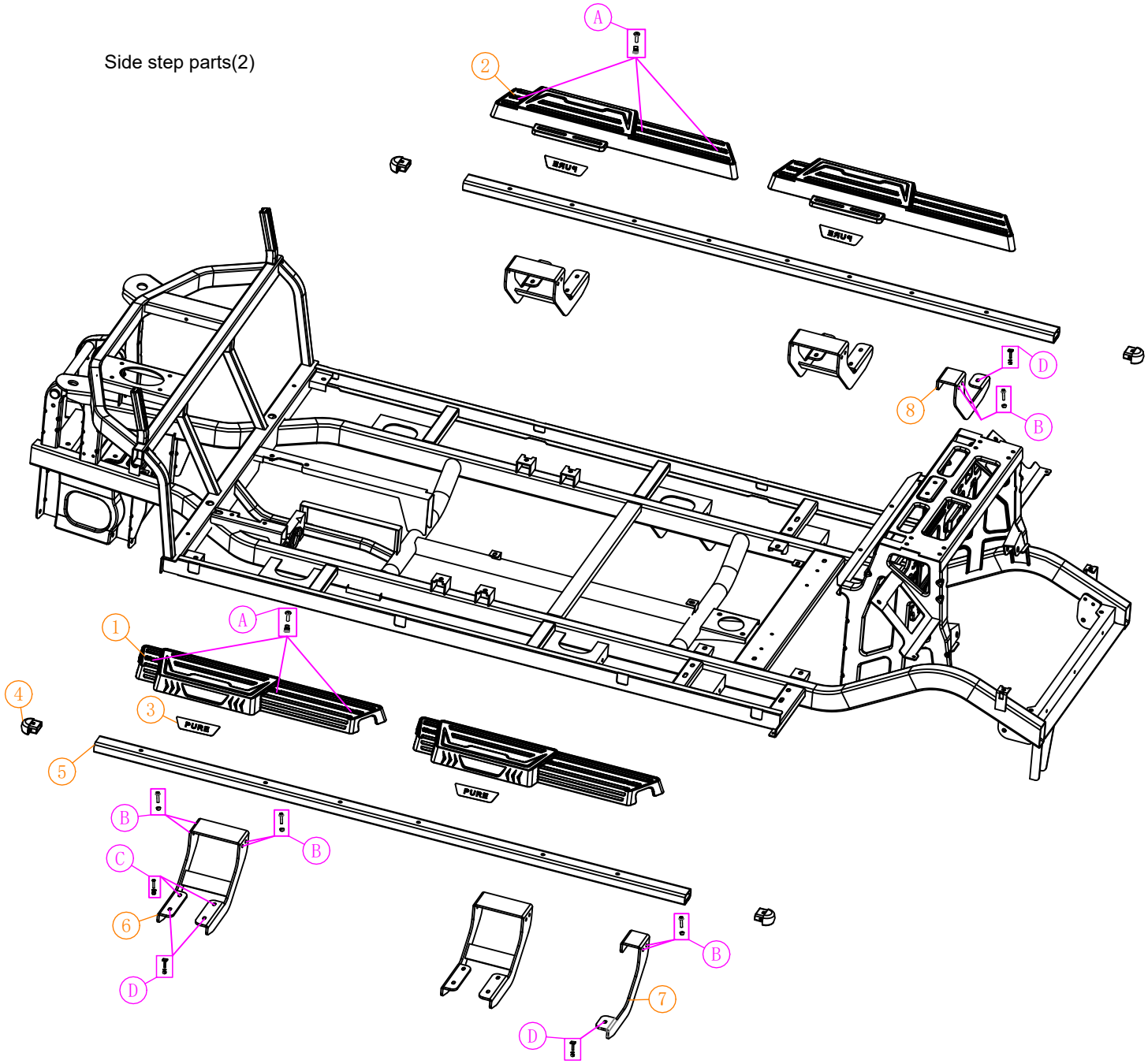

screw specifications

NO:	Code	Name	QTY	Remark
A	HW-717-PR	6*25）Stainless steel large flat head cross screw	12	
	HW-718-PR	(M6) Rivet nut	12	
B	HW-212-IC	(8*25) Flange screw	20	
	HW-205-IC	(M8) Flange self-locking nut	20	
C	HW-719-PR	（6*30） Hexagonal stainless steel screw	8	
	HW-720-PR	（1.0*6*12） Flat gasket	8	
	HW-310-IC	(M6) Stainless steel nut	8	
D	HW-ECHD304	(M6*50) All sides screw	10	
	HW-223-IC	(6mm) Flange self-locking nut	10	
	HW-222-IC	（1.5*6.5*26） Flat gasket	10	

C727.4G/4+2G

Side step parts(2)

NO:	Code	Name	QTY	Remark
1	NB-401-PR	C727 Side pedal-L(Driver)	2	Injection parts Optional
2	NB-402-PR	C727 Side step-R(Passenger)	2	Injection parts Optional
3	NB-403-PR	C727 side pedal logo(PURE)	4	Optional
4	NB-404-PR	Side step installation pipe plug cover	4	Injection parts Optional
5	BD-101-PR	C727.2G Side step installation pipe	2	Optional
6	NB-406-PR	C727 Side step front bracket	4	Optional
7	NB-407-PR	C727 Side step rear bracket-L(Driver)	1	Optional
8	ELE-708-IC	C727 Side step rear bracket-R(Passenger)	1	Optional

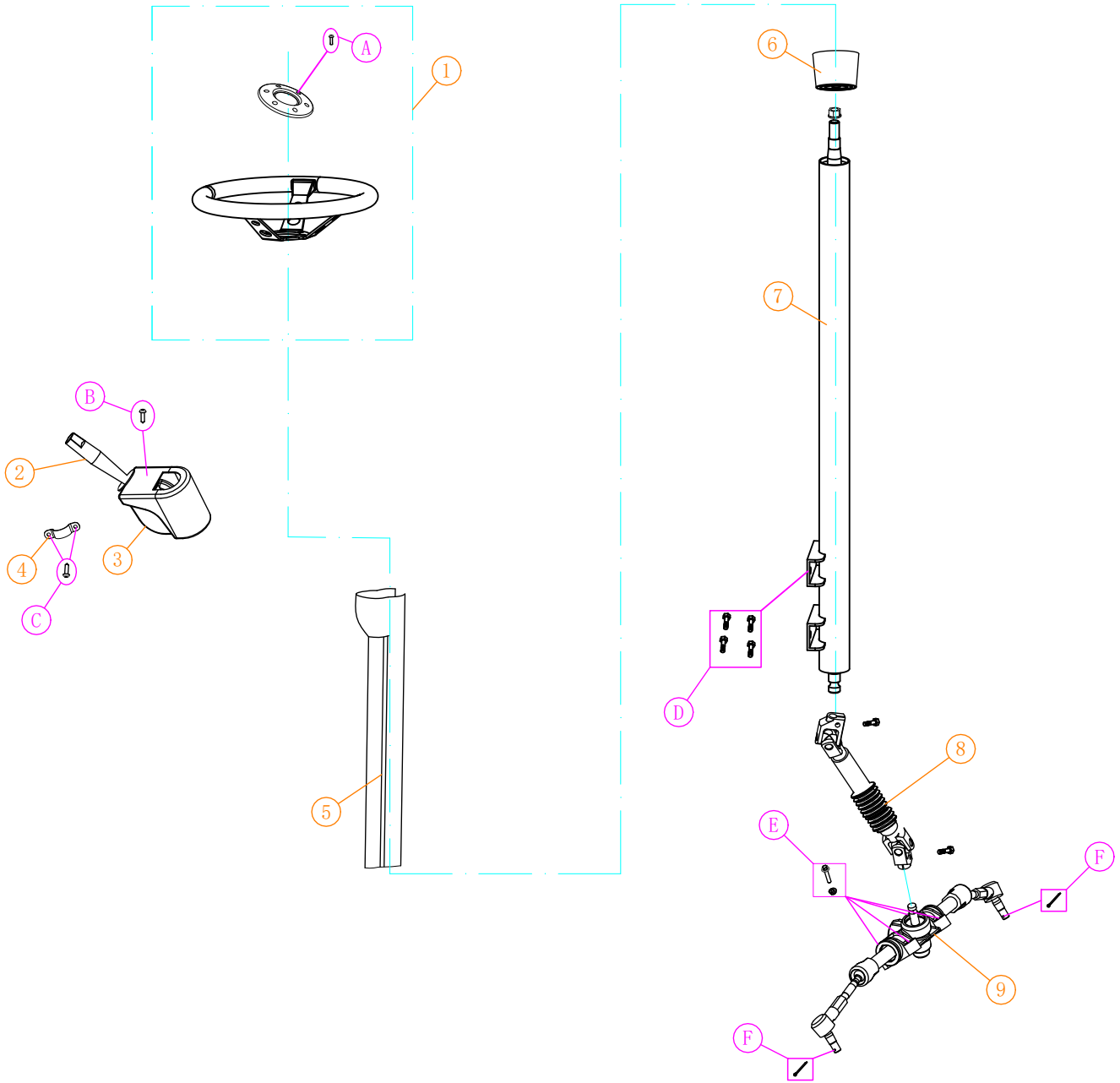

Steering system(1)

NO:	Code	Name	QTY	Remark
1	SR-101-PR	Momo steering wheel	1	
2	SR-102-PR	Single arm combination switch	1	
3	BD-718-IC	Single arm combination switch holder	1	
4	ELE-702-IC	Half side code	2	
5	SR-ECHD807	A627 steering switch wire cover (injection molded part)	1	
6	SR-305-IC	S8. FA Momo steering hub adapter	1	
7	SR-103-PR	C727 column (with self-reset)	1	C727.2/2+2/2G/2+2G C727.4/4+2/4G/4+2G
8	SR-327-IC	A627 Universal joint	1	Normal style
	SR-328-IC	A627 heightened vehicle universal joint fork assembly-B	1	Raised style
9	SR-201-ICGPR	C727 Steering	1	Normal style
	SR-301-IC	A627 Heightened car steering machine-B	1	Raised style
A	HW-232-IC	Black round head cross screw	6	5*16
B	HW-284-IC	Stainless steel wood grain round head Phillips screw	4	4*16
C	HW-234-IC	Stinless steel round head Phillips screw	4	5*25
D	HW-208-IC	Flange Screw	4	8*25
E	HW-701-PR	(10*40) Flange screw	4	
	HW-239-IC	(10mm) Flange self-locking nut	4	
F	BRAK-ECHD102	Cotter pin	2	2.5*30

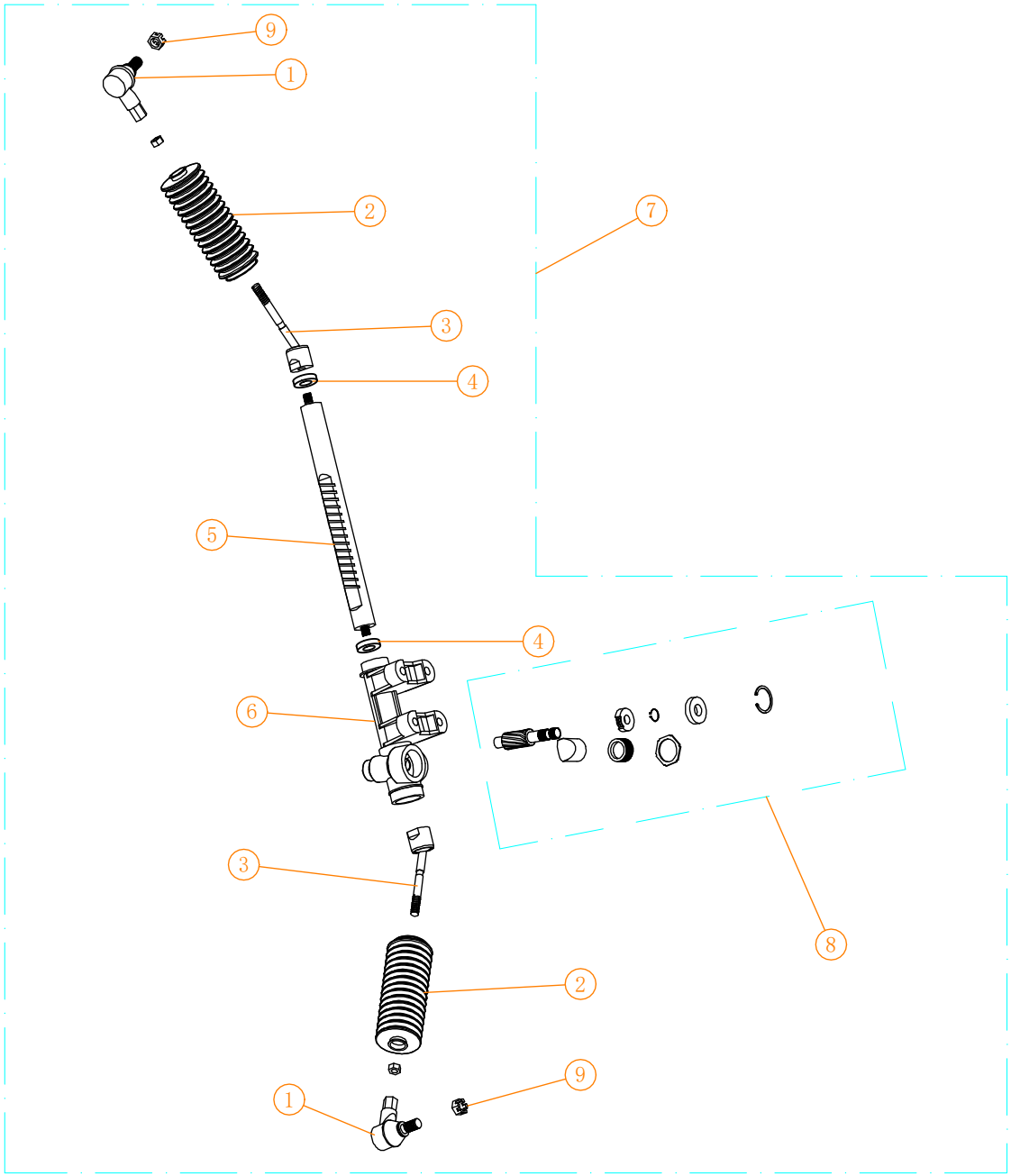

Steering system(2)

NO:	Code	Name	QTY	Remark
1	SR-ECHD802	A direction machine small ball head	2	Normal style
	SR-321-IC	A627 heightening car steering machine small ball head	2	加高款 Raised style
2	SR-105-PR	C727 Dust proof rubber boot	2	TPV
3	SR-ECHD803	A-type car steering gear large ball head	2	Normal style
	SR-ECHD806	A627 heightening car steering machine large ball head	2	Raised style
4	SR-106-PR	827 steering gear limit sleeve Steering	2	Normal style
5	SR-325-IC	A627 Steering gear rack	1	Normal style
	SR-ECHD800	Type A car steering gear rack	1	Raised style
6	SR-326-IC	Steering box housing	1	
7	SR-201-ICGPR	C727 Steering	1	Normal style
	SR-301-IC	A627 Heightened car steering machine-B	1	Raised style
8	SR-329-IC	Steering machine repair kit	1	
9	HW-237-IC	Steering machine ball nut	2	M12

non lifted
Four wheel disc brake
Viewing from Left front wheel

Front suspension(1)

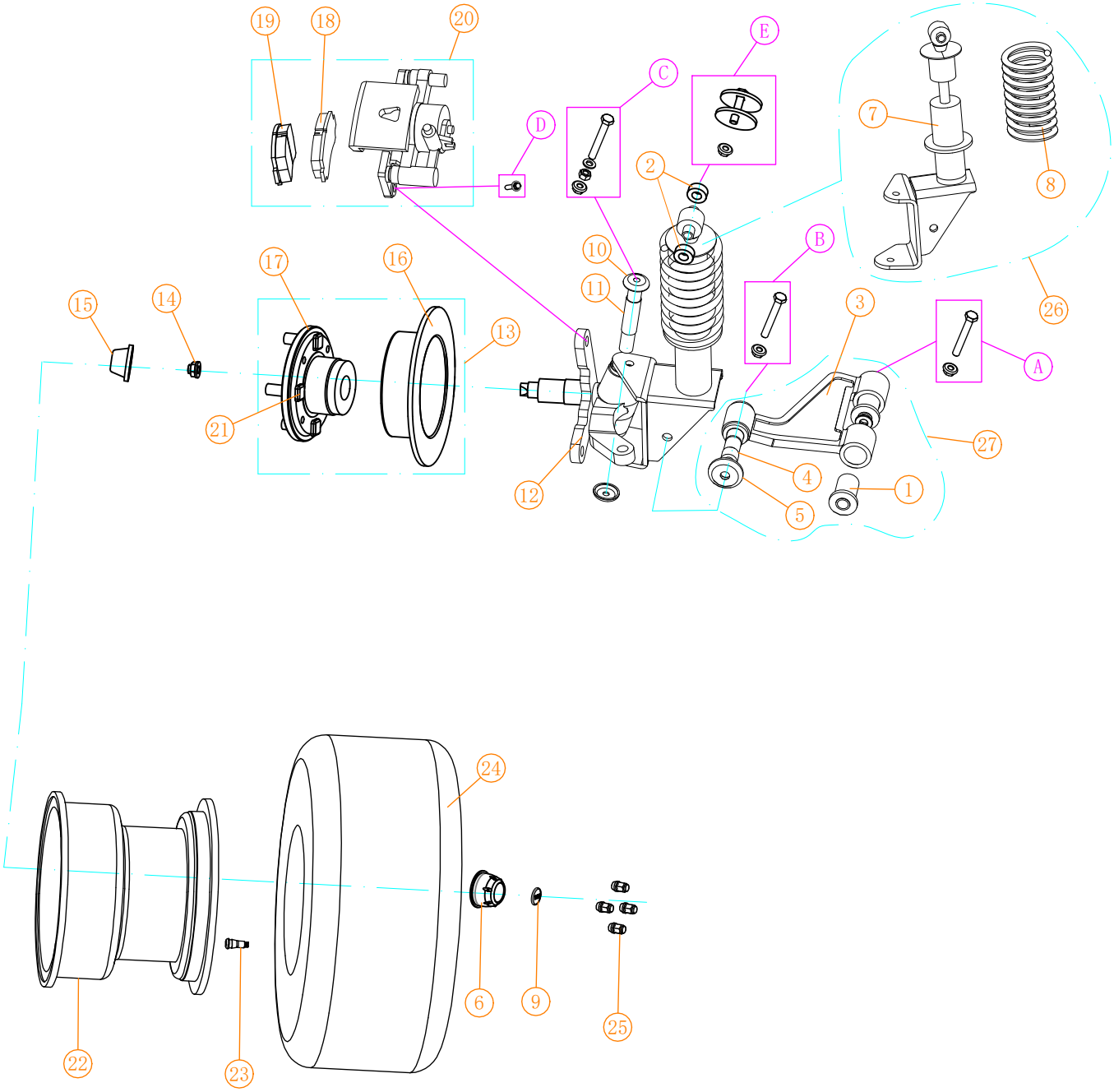

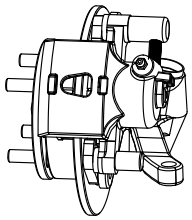

This item contains:
12、13、14、15、20

Note : The left front wheel uses the A-type disc brake claw assembly/L(Driver)

The right front wheel uses the A-type disc brake claw assembly/R(Passenger)

screw specifications

NO:	Code	Name	QTY	Remark
A	HW-224-IC	GM12-75 Screw	4	M12*75
	HW-231-IC	Flange self-locking nut	4	M12
B	HW-246-IC	GM12-85 Screw	2	M12*85
	HW-231-IC	Flange self-locking nut	2	M12
C	HW-247-IC	GM10*140 Screw	2	M10*140
	HW-379-IC	（2.0*10*20） Flat gasket	2	
	HW-380-IC	Flange outer hexagon common nut	2	M10
	HW-239-IC	Flange self-locking nut	2	M10
D	HW-248-IC	Flange Screw	4	M12*20
E	HW-249-IC	Adjusting screw	2	M10*70
	HW-239-IC	Flange self-locking nut	2	M10
	HW-702-PR	Adjusting gasket	2	4*49.5

Front suspension(1)

NO:	Code	Name	QTY	Remark
1	SUS-715-IC	Bush	4	two for each side
2	SUS-716-IC	S4P Limi tingrubber sleeve	4	
3	SUS-717-IC	Rocker arm	2	one for each side
4	SUS-718-IC	Arm shaft	2	one for each side
5	SUS-719-IC	Arm seal	4	two for each side
6	SUS-726-IC	Wheel rim cover	2	
7	SUS-720-IC	front shock absorber/L(Driver)	1	
	SUS-721-IC	front shock absorber/R(Passenger)	1	
8	SUS-722-IC	A8-Front spring	2	C727.2/2+2
	SUS-723-IC	A11-Front spring	2	C727.4/4+2
9	WT-103-PR	Wheel rim logo (PURE)	2	C727.2G/2+2G C727.4G/4+2G
10	SUS-724-IC	Knuckle shaft seal/big	4	two for each side
11	HW-247-IC	GM10*140 Pin screw	2	one for each side
12	SUS-713-IC	Disc brake knuckle/R(Passenger)	1	Color zinc plating, For hub bearings
	SUS-711-IC	Disc brake knuckle/L(Driver)	1	
13	BR-701-IC	A Dise Wheel Bearing assy	2	
14	HW-243-IC	knuckle nut	2	
15	SUS-726-IC	Metal Wheel cover	2	
16	BRAK-617-IC	A brake disc	2	
17	BR-702-IC	A Disc brake bearing base	2	
18	BRAK-661-IC	Front brake caliper brake pad/ inner	2	one for each side
19	BRAK-662-IC	Front brake caliper brake pad/ outer	2	one for each side
20	BRAK-613-IC	Front brake cylinder/L(Driver)	1	
	BRAK-612-IC	Front brake cylinder/R(Passenger)	1	
21	HW-245-IC	Disc wheel screw	8	
22	WT-101-PR	（10*7） Wheel rim	2	
23	WT-106-IC	Valve	2	one for each side
24	WT-102-PR	brake wheel	2	
25	WT-109-IC	C type hub nut (with cap)	8	four for each side
26	SUS-707-IC	A8 front shock absorber assy/L (Driver)	1	C727.2/2+2
	SUS-728-IC	A8 front shock absorber assy/R (Passenger)	1	
	SUS-729-IC	A11 front shock absorber assy/L (Driver)	1	C727.4/4+2
	SUS-730-IC	A11 front shock absorber assy/R (Passenger)	1	
27	SUS-710-IC	A-type car rocker arm assembly	2	
28	BRAK-609-IC	A Disc brake knuckle assy/ L(Driver)	1	
	BRAK-608-IC	A Disc brake knuckle assy/ R(Passenger)	1	

screw specifications

NO:	Code	Name	QTY	Remark
A	HW-250-IC	(10*75) Flange screw	4	
	HW-239-IC	(10mm) Flange self-locking nut	4	
B	HW-251-IC	(12*50) Flange screw	4	
	HW-231-IC	(12mm) Flange self-locking nut	4	
C	HW-238-IC	(10*35) Flange screw	2	
	HW-239-IC	(10mm) Flange self-locking nut	2	

heighten
Four wheel disc brake

Viewing from Left front wheel

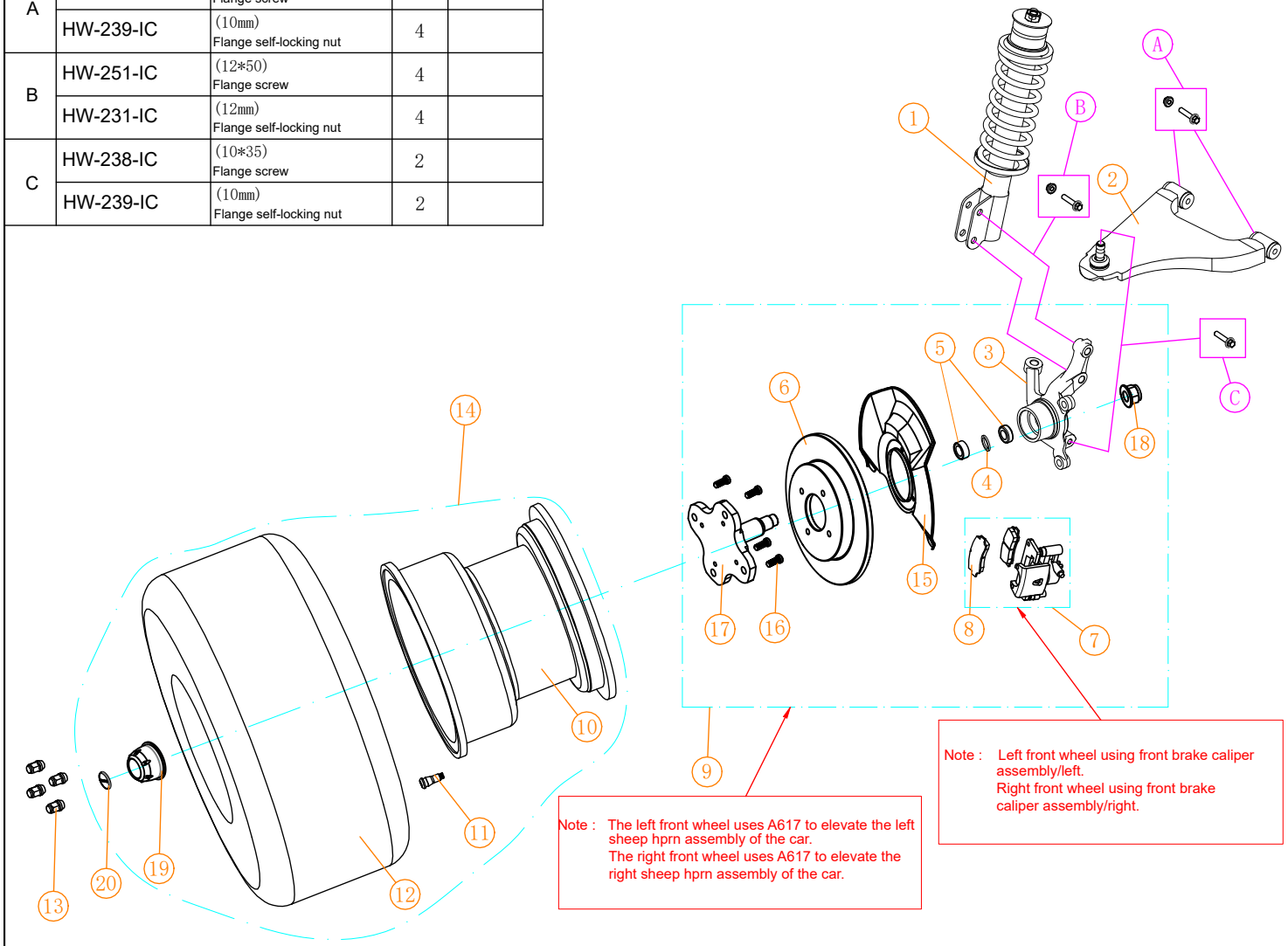

Note : The left front wheel uses A617 to elevate the left sheep hprn assembly of the car.
The right front wheel uses A617 to elevate the right sheep hprn assembly of the car.

Note : Left front wheel using front brake caliper assembly/left.
Right front wheel using front brake caliper assembly/right.

19	WT-103-IC	Wheel rim cover	2	
20	ACS-717-IC	Wheel rim logo	2	

Front suspension(2)

NO:	Code	Name	QTY	Remark
1	SUS-731-IC	A617.2G Front shock absorber ass L(Driver)	1	C727.2G/2+2G
	SUS-703-IC	A617.2G Front shock absorber ass R(Passenger)	1	
	SUS-732-IC	A617.4G Front shock absorber ass L(Driver)	1	C727.4G/4+2G
	SUS-702-IC	A617.4G Front shock absorber ass R(Passenger)	1	
2	SUS-701-IC	PD Lower control arm/ L(Driver)	1	
	SUS-700-IC	PD Lower control arm/ R(Passenger)	1	
3	SUS-733-IC	S2.DB Knuckle/L(Driver)	1	
	SUS-734-IC	S2.DB Knuckle/R(Passenger)	1	
4	BR-706-IC	Bearing base seal	2	one for each side
5	BR-707-IC	Bearing 6205	4	two for each side
6	BRAK-619-IC	Front brake disc	2	one for each side
7	BRAK-615-IC	Front brake callipers/ R(Passenger)	1	
	BRAK-614-IC	Front brake callipers/L(Driver)	1	
8	BRAK-620-IC	V2 Front brake shoe	4	two for each side
9	BRAK-603-IC	A617 Knuckle assy for lifted cart/ R(Passenger)	1	
	BRAK-604-IC	A617 Knuckle assy for lifted cart/ L(Driver)	1	
10	WT-104-PR	19571270 Wheel rim	2	one for each side
11	WT-106-IC	Vacuum nozzle	2	one for each side
12	WT-105-PR	Brake wheel	2	23 inches
13	WT-109-IC	C type hub nut (with cap)	8	four for each side
15	SUS-735-IC	Front brake disc splash guard/L(Driver)	1	
	SUS-736-IC	Front brake disc splash guard/R(Passenger)	1	
16	HW-378-IC	Raised car disc brake hub screws	8	
17	BR-708-IC	Bearing base	2	
18	HW-243-IC	Knuckle hub nut	2	

screw specifications

NO:	Code	Name	QTY	Remark
A	HW-253-IC	(12*80) Flange screw	1	
	HW-231-IC	(12mm) Flange self-locking nut	1	
B	HW-254-IC	(10*20) Flange screw	2	
	HW-239-IC	(10mm) Flange self-locking nut	2	
C	HW-255-IC	(10*50) Flange screw	4	
	HW-239-IC	(10mm) Flange self-locking nut	4	
D	SUS-747-IC	(3.0*12*40) Gasket	2	
	HW-252-IC	(12*70) Flange Screw	2	
	HW-231-IC	(M12) Flange self-locking nut	2	

C727.2/2+2/4/4+2

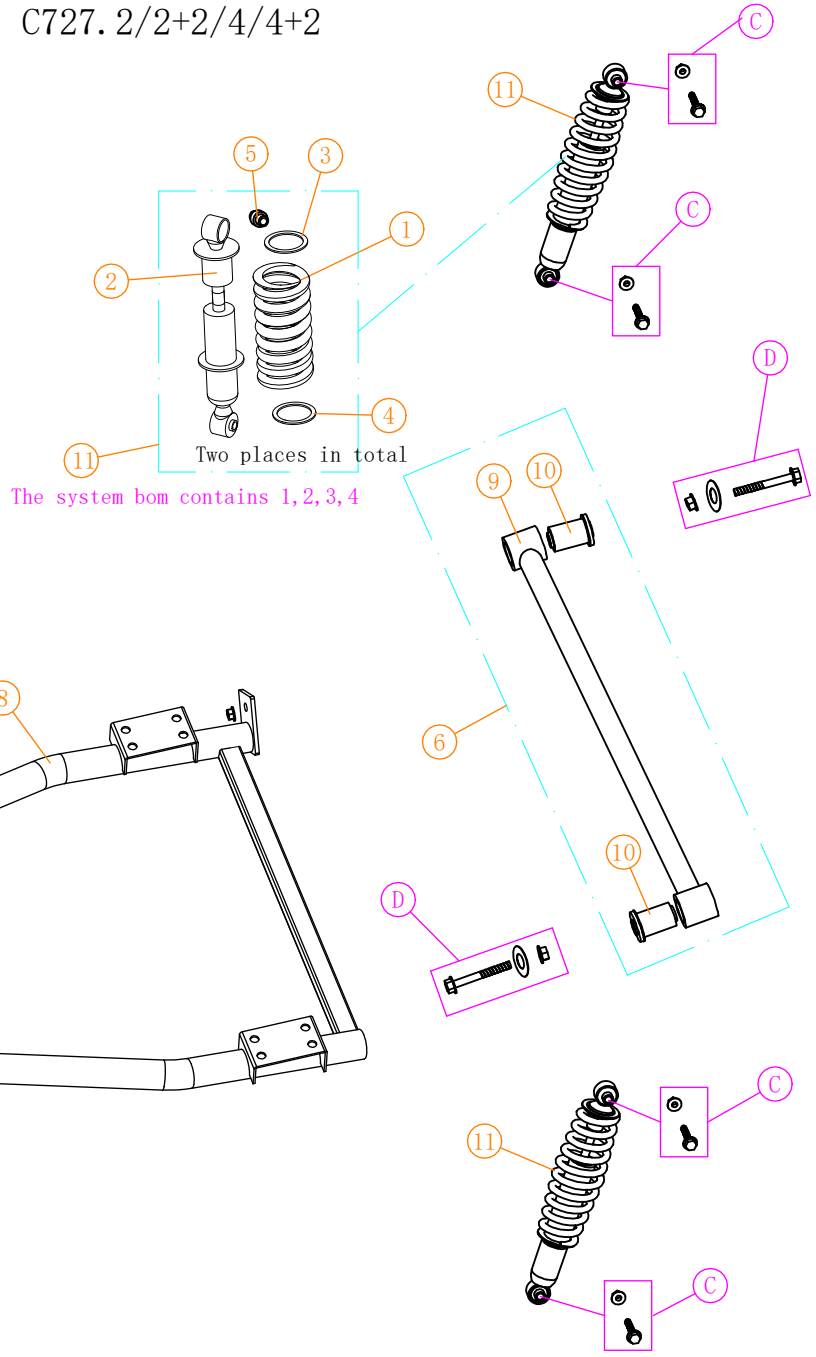

The system bom contains 1,2,3,4

Rear suspension parts(1)

NO:	Code	Name	QTY	Remark
1	SUS-737-IC	A8 Rear spring	2	C727.2/2+2
	SUS-738-IC	A11 Rear spring	2	C727.4/4+2
2	SUS-739-IC	Rear shock absorber	2	
3	SUS-740-IC	Rear shock absorb rubber	2	Inner diameter 44mm Outer diameter 55mm
4	SUS-741-IC	Rear shock absorb low rubber rim	2	Inner diameter 40mm Outer diameter 55mm
5	SUS-742-IC	Rear shock absorb bush	2	
6	SUS-743-IC	A617 rear balancing pole assy	1	
7	SUS-744-IC	Shock absorb rubber	1	
8	SUS-745-IC	A617 transaxle bend pipe	1	C727.2/2+2 C727.4/4+2
9	SUS-746-IC	A617 rear balancing pole	1	
10	SUS-715-IC	Suspension bush	2	∅13*50mm
11	SUS-748-IC	A8 rear shock absorber assy	2	C727.2/2+2
	SUS-749-IC	A11 rear shock absorber assy	2	C727.4/4+2

C727.2G/2+2G/4G/4+2G

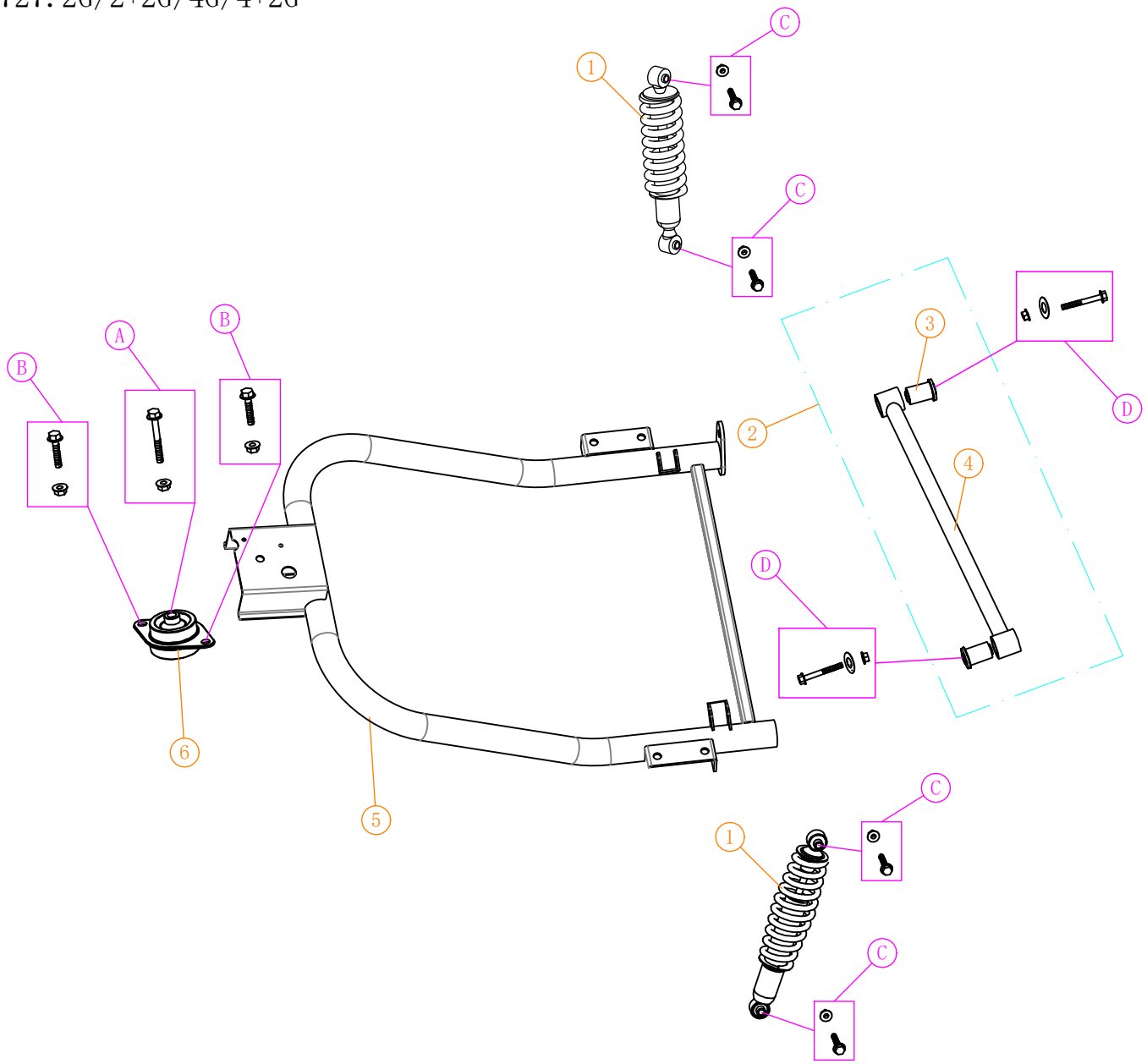

Rear suspension parts(2)

NO:	Code	Name	QTY	Remark
1	SUS-407-ECO	A627.2G Rear shock absorber assy	2	C727.2G/2+2G
	SUS-ECHD300	A627.4G Rear shock absorber assy	2	C727.4G/4+2G
2	SUS-743-IC	A627 rear balancing pole assy	1	
3	SUS-715-IC	Suspension bush	2	∅13*50mm
4	SUS-746-IC	A627 rear balancing pole	1	
5	SUS-501-PR	C727 Heightened car rear axle elbow assembly (electric + injection)	1	
6	SUS-744-IC	Shock absorb rubber	1	
A	HW-253-IC	(12*80) flange screws	1	
	HW-231-IC	(12mm) Flange self-locking nut	1	
B	HW-254-IC	(10*20) Flange screw	2	
	HW-239-IC	(10mm) Flange self-locking nut	2	
C	HW-256-IC	(14*50) Flange screw	4	
	HW-257-IC	(14mm) Flange self-locking nut	4	
D	SUS-747-IC	(3.0*12*40) Gasket	2	
	HW-703-PR	(12*75) Flange Screw	2	
	HW-231-IC	(M12) Flange self-locking nut	2	

Four wheel disc brake

Transaxle system (1)

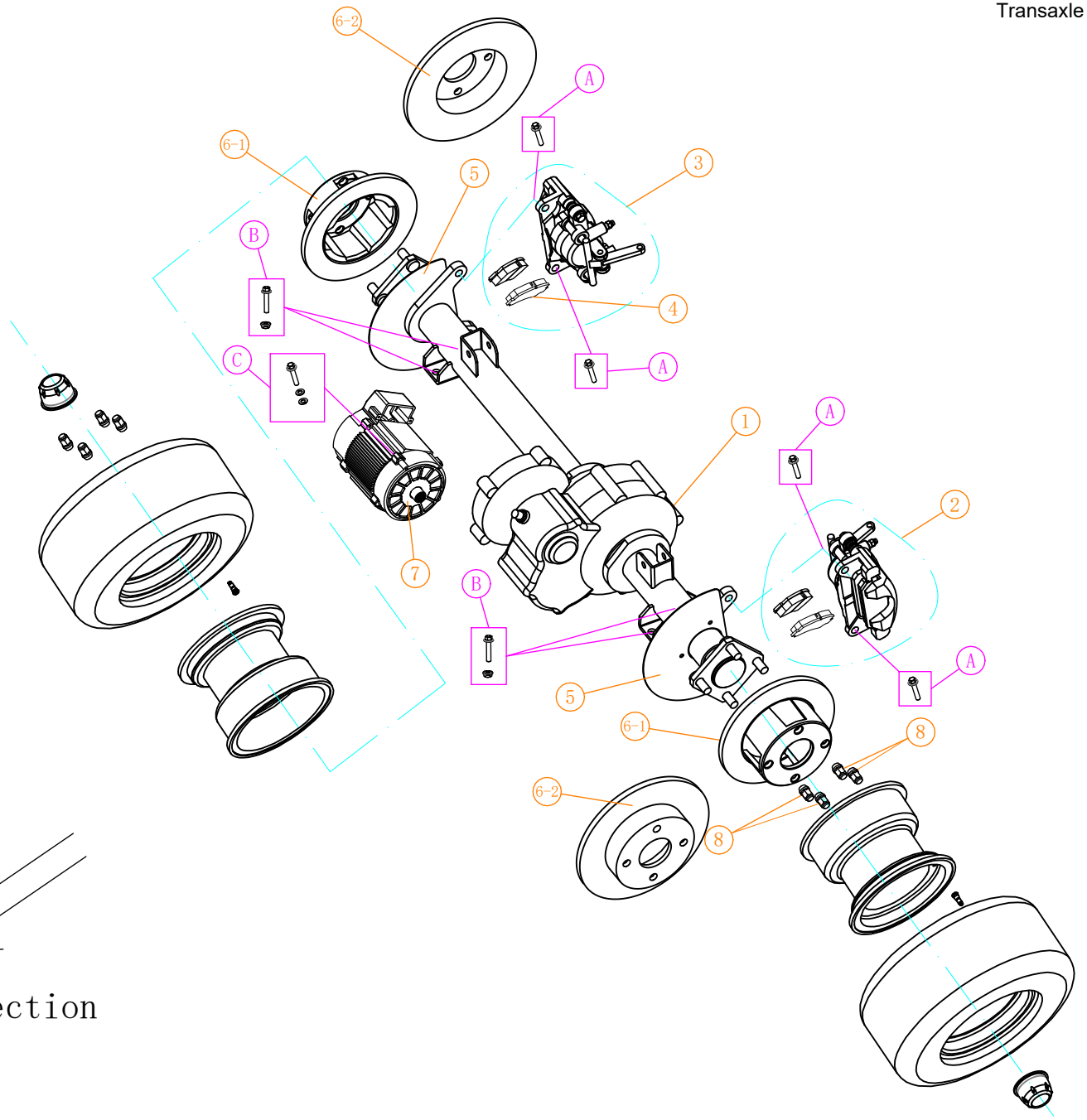

Heading direction

screw specifications

NO:	Code	Name	QTY	Remark
A	HW-248-IC	(12*20) Flange screw	4	
B	HW-704-PR	(12*30) Flange screw	4	
	HW-231-IC	(12mm) Flange self-locking nut	4	
C	HW-264-IC	(8*35) Flange screw	5	5KW motor
	HW-207-IC	(1.2*8*20) Flat gasket	5	
	HW-263-IC	(M8) Spring gasket	5	

Transaxle system (1)

NO:	Code	Name	QTY	Remark
1	AXEL-709-IC	A627 disc brake transaxle-7	1	14:1、Equipped with 5KW motor C727.2/2+2/4/4+2
	AXEL-718-IC	A627 disc brake transaxle-12	1	14:1, equipped with 5KW motor C727.2G/2+2G/4G/4+2G
2	BRAK-606-IC	A627 rear brake pincers for lifted cart/L(Driver)	1	
3	BRAK-610-IC	A627 raised rear brake caliper (R)/Passenger	1	
4	BRAK-621-IC	A617 rear brake shoe for lifted cart	4	
5	BRAK-665-IC	A627 disc brake rear axle fender-B	2	non lifted Four wheel disc brake
	SUS-759-IC	A617.2G disc brake rear axle fender-B	2	lifted Four wheel disc brake
6-1	BRAK-624-IC	Φ200 rear brake disc	2	non lifted Four wheel disc brake
6-2	BRAK-625-IC	A627 Rear brake disc for lifted cart	2	lifted Four wheel disc brake
7	MOTOR-702-IC	High efficiency three-phase asynchronous motor	1	5kw 19 teeth

Brake system parys

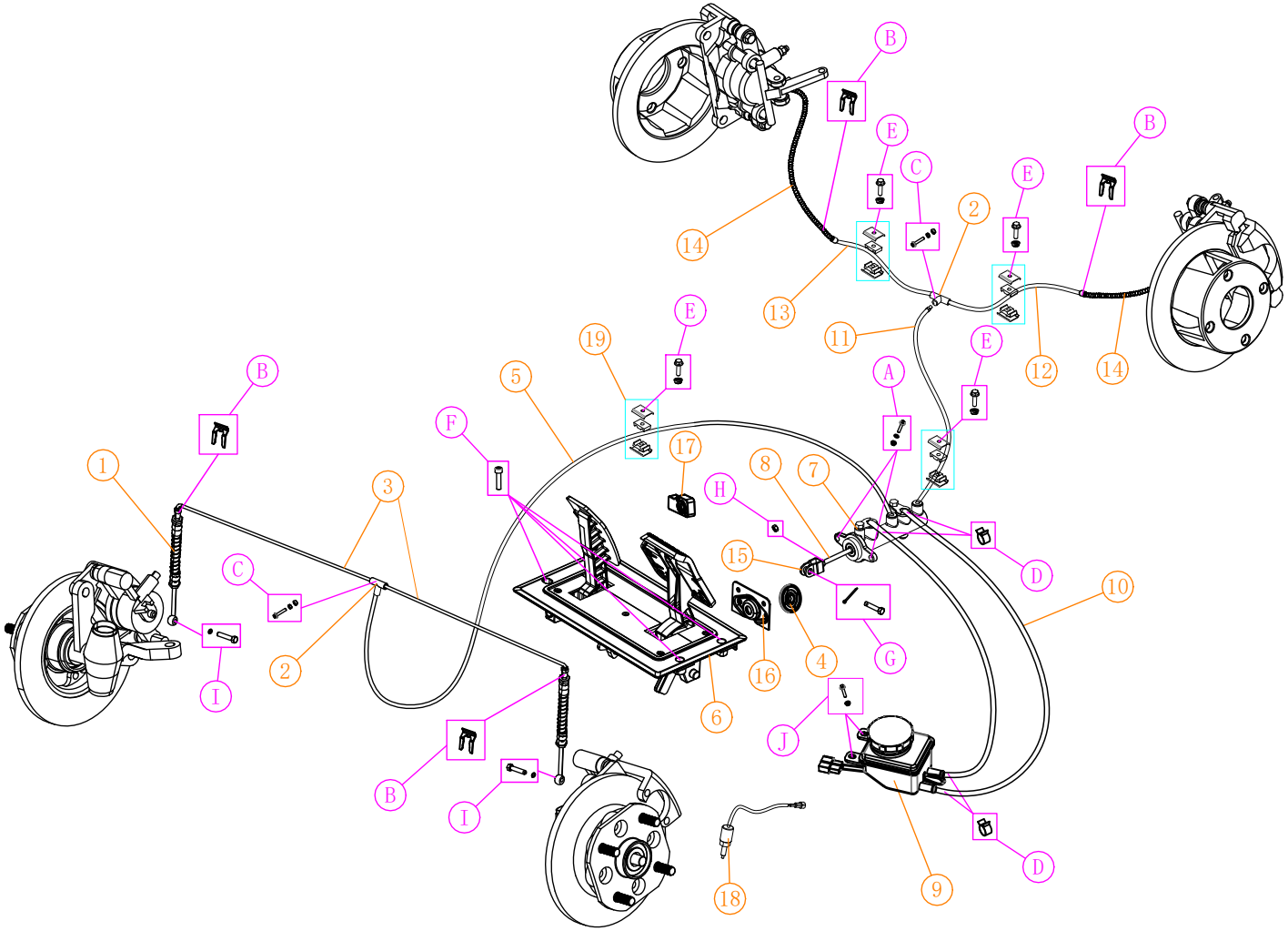

screw specifications

NO:	Code	Name	QTY	Remark
A	BRAK-901-HD	(8*30) Flange screw	2	
	HW-205-IC	(M8) Flange self-locking nut	2	
	HW-207-IC	(1.2*8*20) Flat gasket	2	
B	HW-270-IC	Disc brake tubing card	2	
C	HW-377-IC	(6*30) Flange screw	2	
	HW-223-IC	(M6) Flange self-locking nut	2	
	HW-260-IC	(1.5*6*18) Flat gasket	2	
D	HW-269-IC	Spring clamp	4	Ø16
E	HW-272-IC	(6*25) Flange screw	4	C727.2/2+2 C727.2G/2+2G
	HW-220-IC	(M6) Hexagon common nut	4	
	HW-272-IC	(6*25) Flange screw	6	C727.4/4+2 C727.4G/4+2G
	HW-220-IC	(M6) Hexagon common nut	6	
F	HW-414-ECO	(8*25) Hex socket Flat Round head screws	4	
G	BRAK-ECHD103	Front pin of brake cable	1	10*25
	BRAK-ECHD102	Cotter pin	1	3*50
H	HW-236-IC	(M8) Hexagon common nut	1	
I	HW-266-IC	Hollow screw	2	Ø10
	HW-271-IC	S14 Plastic oil pipe gasket	4	
J	HW-219-IC	(6*16) Flange screw	2	
	HW-223-IC	(6mm) Flange self-locking nut	2	

Brake system parys

NO:	Code	Name	QTY	Remark
1	BRAK-639-IC	Type A car front soft oil pipe	2	Normal style
2	BRAK-637-IC	Disc brake tee	2	
3	BRAK-668-IC	Brake steel oil pipe 250	2	Raised style
4	BRAK-643-IC	Brake master cylinder dustproof rubber pad	1	
5	BRAK-667-IC	Brake steel oil pipe 750	1	
6	BRAK-301-PR	A827 Hydraudlc brake pedal assy	1	
7	BRAK-601-IC	Brake master cylinder	1	7/8
8	BRAK-908-HD	S14 Brake master cylinder putter	1	
9	BRAK-912-HD	Brake oil tank-B	1	
10	BRAK-627-IC	Oil tank pipe	2	
11	BRAK-631-IC	Brake steel oil pipe 370	1	C727.2/2+2/2G/2+2G
	BRAK-671-IC	Brake steel oil pipe 1010	1	C727.4/4+2/4G/4+2G
12	BRAK-667-IC	Brake steel oil pipe 750	1	C727.2/2+2/2G/2+2G C727.4/4+2/4G/4+2G
13	BRAK-667-IC	Brake steel oil pipe 750	1	C727.2/2+2/2G/2+2G C727.4/4+2/4G/4+2G
14	BRAK-636-IC	Rear plastic oil pipe	2	600mm
15	BRAK-657-IC	Brake pedal master cylinder connecting fork	1	
16	BRAK-646-IC	Brake master cylinder fixed plate	1	
17	BRAK-ECHD101	Accelerator Hall-D	1	
18	BRAK-ECHD100	A827 waterproof Brake light switch	1	
19	BRAK-645-IC	Locking buckle	3	C727.2/2+2/2G/2+2G
			4	C727.4/4+2/4G/4+2G

Normal style

Front body cover(1)

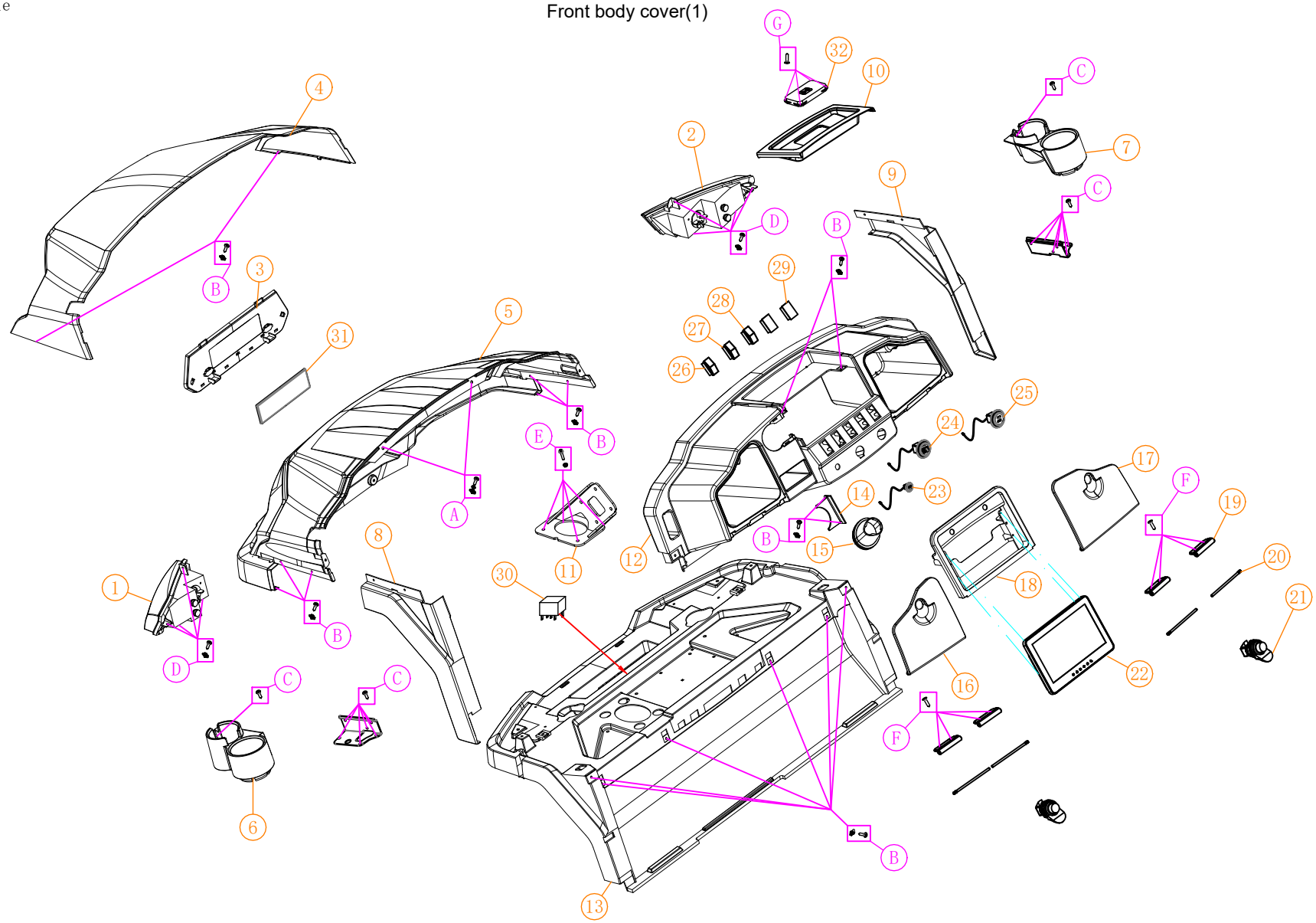

screw specifications

NO:	Code	Name	QTY	Remark
A	HW-279-IC	（5*20）Stainless steel large flat head tapping screw	2	
	HW-278-IC	(M5) Flange self-locking nut	2	
	HW-316-IC	（1*5*12） Flat gasket	2	
B	HW-279-IC	（5*20）Stainless steel large flat head tapping screw	16	
	HW-278-IC	(M5) Flange self-locking nut	16	
C	HW-281-IC	（5*16） Stainless steel large flat head Phillips tapping screw	14	
D	HW-281-IC	（5*16） Stainless steel large flat head Phillips tapping screw	8	
	HW-278-IC	(M5) Flange self-locking nut	8	
E	HW-212-IC	(8*25) Flange screw	4	
	HW-205-IC	(8mm) Flange self-locking nut	4	
F	HW-284-IC	（4*16）Stainless steel wood grain flat head Phillips screw	8	
G	HW-705-PR	（2*7）Stainless steel flat head cross self-tapping screw	4	

Front body cover(1)

NO:	Code	Name	QTY	Remark
1	LIGHT-101-PR	C727 Integrated front head light/L(Driver)	1	
2	LIGHT-102-PR	C727 Integrated front head light/R(Passenger)	1	
3	BD-108-HD	C727 Front grille light	1	
4	BD-119-PR	C727 Front cover	1	Injection parts
5	BD-120-PR	C727 Front-cover lining	1	Injection parts
6	BD-121-PR	C727 Cup holder-L(Driver)	1	
7	BD-122-PR	C727 Cup holder-R(Passenger)	1	
8	BD-123-PR	C727 Front wheel arches-L(Driver)	1	
9	BD-124-PR	C727 Front wheel arches-R (Passenger)	1	
10	BD-102-PR	C727 Instrument panel storage box	1	
11	BD-103-PR	C727 Column installation seat	1	
12	DSH-601-PR	C727 Front dashboard	1	Injection parts
13	BD-104-PR	C727 Instrument panel	1	Injection parts
14	BD-105-PR	C727 Column side cover plate	1	
15	BD-106-PR	C727 Column rubber sleeve	1	
16	BD-107-PR	C727 Storage pocket cover-L(Driver)	1	
17	BD-108-PR	C727 Storage pocket cover-R(Passenger)	1	
18	BD-109-PR	C727 Installation bracket for instrument panel machine	1	
19	BD-110-PR	C727 Storage compartment lid hinge	4	
20	BD-111-PR	Knurled pin shaft	4	
21	ST-774-IC	Storage bag cover lock	1	
22	BD-850-IC	Multimedia vehicle engine	1	
23	BD-112-PR	USB ports	1	
24	BD-113-PR	BUTTON START	1	
25	BD-133-HD	USB+Type-C interface	1	
26	BD-114-PR	Rocker switch-Front/rear gears	1	
27	BD-115-PR	Rocker switch-hazard lights	1	
28	BD-116-PR	Rocker switch-Fast and slow	1	
29	BD-724-IC	A627 front and rear gear switch cover	2	
30	ELE-707-IC	Fasher	1	
31	BD-117-PR	PURE LOGO Lamp sign	1	
32	BD-118-PR	Wireless charging module	1	Maximum charging power 15W

Raised style (The unmarked parts are consistent with the regular model)

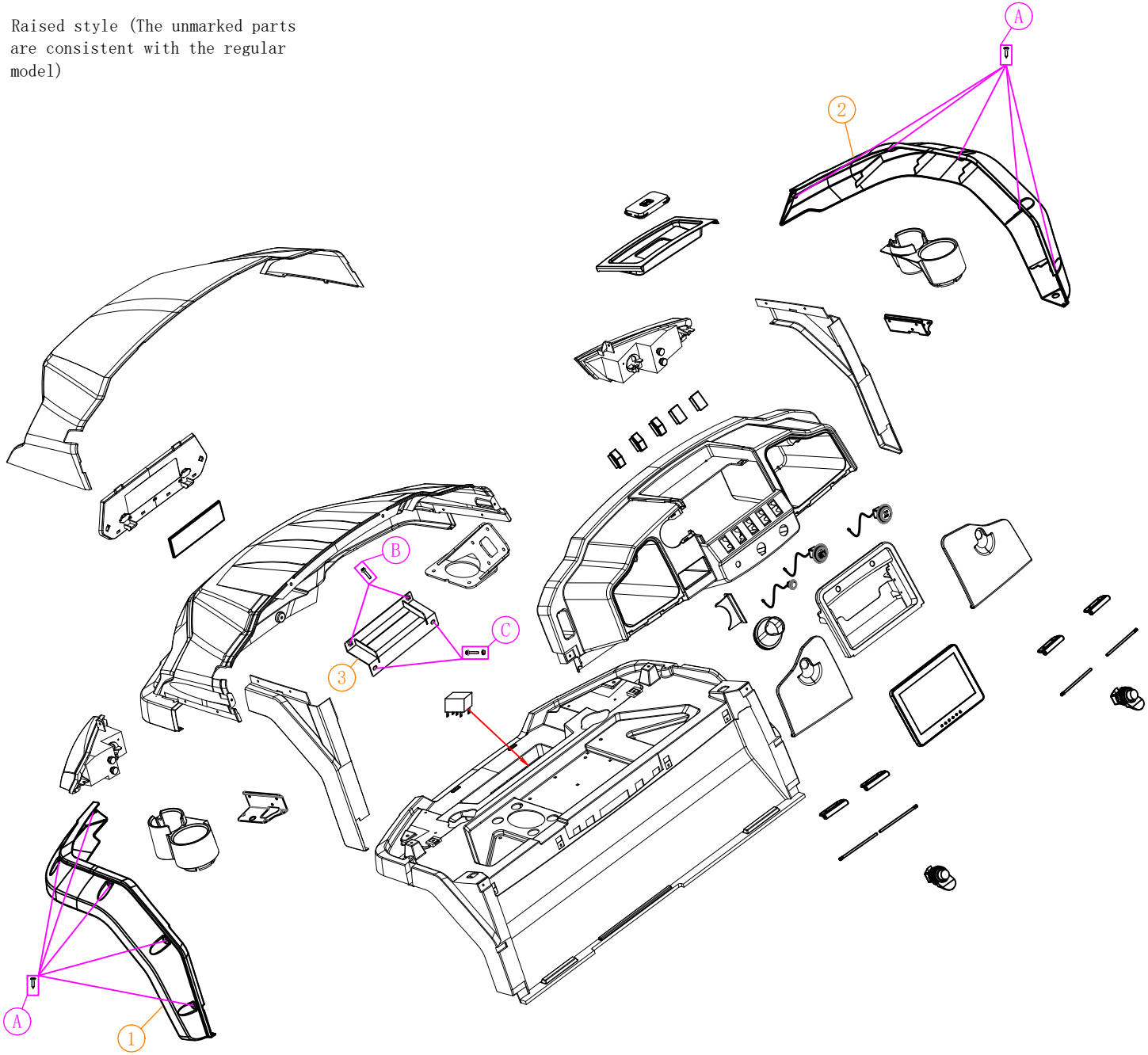

Front body cover(2)

NO:	Code	Name	QTY	Remark
1	FF-101-PR	C727 Raise the front wheel arches-L(Driver)	1	Injection parts
2	FF-102-PR	C727Raise the front wheel arches-R(Passenger)	1	Injection parts
3	BD-125-PR	C727 Raised front cover support seat	1	
A	HW-706-PR	(5*30) Black stainless steel wood grain round head Phillips screw	10	
B	HW-272-IC	(6*25) Flange screw	2	
C	HW-208-IC	(8*20) Flange screw	2	
	HW-205-IC	(M8) Flange self-locking nut	2	

Normal style

Rear body cover(1)

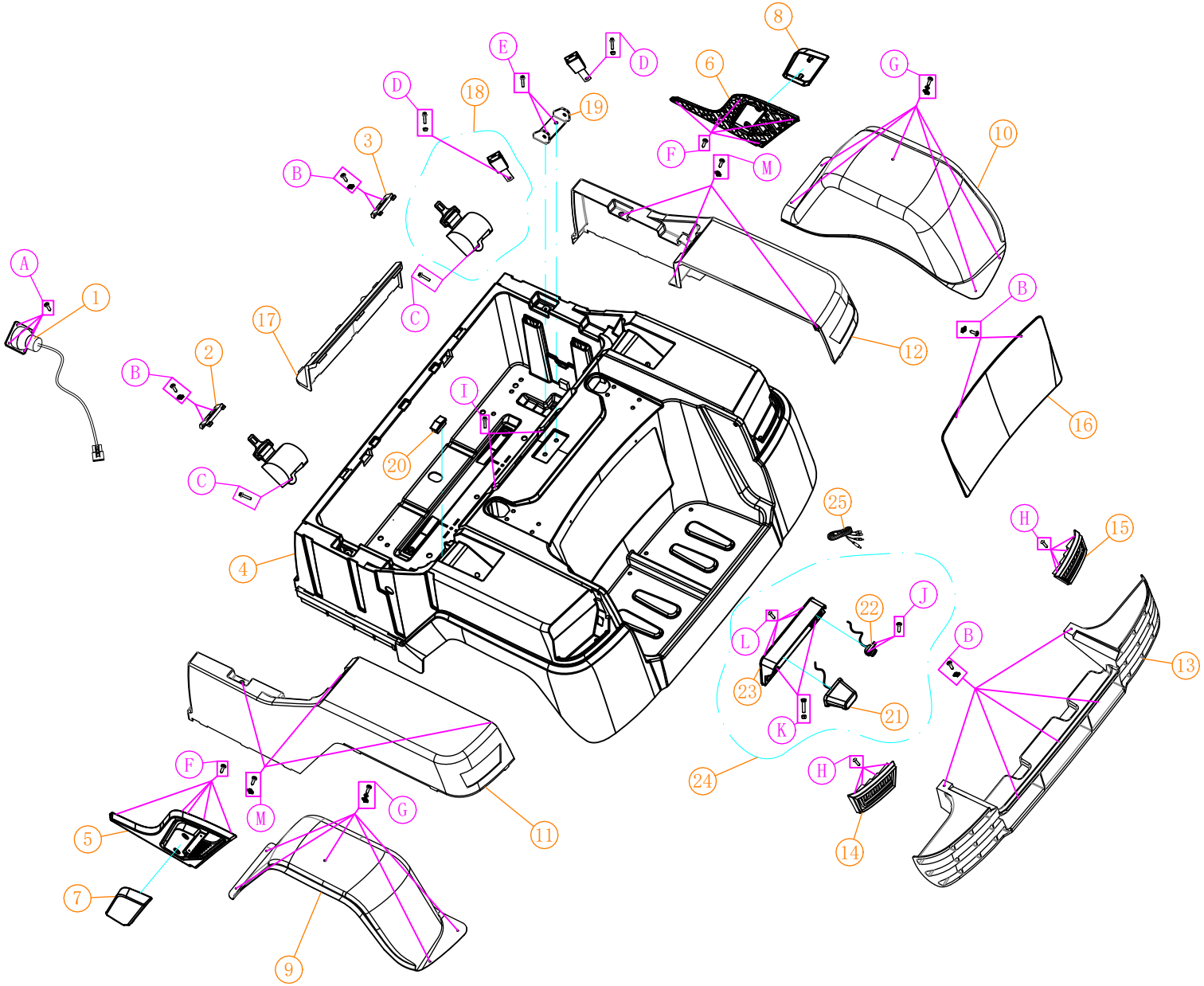

screw specifications

NO:	Code	Name	QTY	Remark
A	HW-279-IC	（5*20）Stainless steel large flat head tapping screw	4	
B	HW-279-IC	（5*20）Stainless steel large flat head tapping screw	11	
	HW-278-IC	(M5) Self-tapping reed nut	11	
C	HW-707-PR	(10*25) Flange screw	2	
D	HW-208-IC	(8*20) Flange screw	2	
	HW-205-IC	(M8) Flange self-locking nut	2	
E	HW-212-IC	(8*25) Flange screw	2	
F	HW-708-PR	（4*12）Stainless steel large flat head tapping screw	10	
G	HW-279-IC	（5*20）Stainless steel large flat head tapping screw	10	
	HW-278-IC	(M5) Flange self-locking nut	10	
	HW-316-IC	（1*5*12） Flat gasket	10	
H	HW-709-PR	（4*16）Cross recessed large flat head self tapping screws	8	
I	HW-209-IC	(6*20) Flange screw	2	
J	HW-710-PR	（3*14）Stainless steel wood grain flat head Phillips screw	2	
K	HW-360-IC	(6*16) Stainless steel hexagon screw	2	Lock license plate screw
	HW-220-IC	(M6) Hexagon nut	2	lock license plate nut
L	HW-381-IC	（5*20）Cross recessed large flat head self tapping screws	4	
M	HW-711-PR	(5*30) Stainless steel wood grain round headPhillips screw	6	
	HW-278-IC	(M5) Self-tapping reed nut	6	

Rear body cover(1)

NO:	Code	Name	QTY	Remark
1	BTRY-728-IC	ICON-Charge socket	1	Contains copper core wires and special connectors
2	BD-134-PR	C727 Seat belt cover-L(Driver)	1	
3	BD-139-PR	C727 Seat belt cover-R(Passenger)	1	
4	BD-140-PR	C727 Rear Body cover	1	Injection parts
5	BD-141-PR	C727 Side light decorative panel-L(Driver)	1	Injection parts
6	BD-142-PR	C727 Side light decorative panel-R(Passenger)	1	Injection parts
7	BD-143-PR	C727 Side light cover plate-L(Driver)	1	
8	BD-144-PR	C727 Side light cover plate-R(Passenger)	1	
9	FF-106-PR	C727 Rear Fender-L(Driver)	1	
10	FF-105-PR	C727 Rear Fender-R(Passenger)	1	
11	BD-126-PR	C727 Rear hood trim panel-L(Driver)	1	
12	BD-127-PR	C727 Rear hood trim panel-R(Passenger)	1	
13	BD-128-PR	C727 Rear bumper support	1	
14	BD-129-PR	C727 tail lamp-L(Driver)	1	
15	BD-130-PR	C727 tail lamp-R(Passenger)	1	
16	BD-131-PR	C727 Motor maintenance cover	1	
17	BD-132-PR	C727 Battery compartment repair cover	1	
18	ST-909-IC	Automatic locking two-point safety belt	2	
19	BD-133-PR	C727 Rear hood safety belt fixing seat	1	Iron parts
20	CHSS-209-HD	Rocker switch (third gear)	1	
21	BD-135-PR	DOT License plate lamp	1	C727.2/2G C727.4/4G
22	BD-136-PR	Reverse camera	1	C727.2/2G C727.4/4G
23	BD-137-PR	C727 License plate light and camera fixing base	1	C727.2/2G C727.4/4G
24	BD-138-PR	C727 License plate holder assembly	1	C727.2/2G C727.4/4G
25	BD-136-PR	Reverse camera cable	1	C727.2/2G C727.4/4G

Raised style (The unmarked parts are consistent with the regular model)

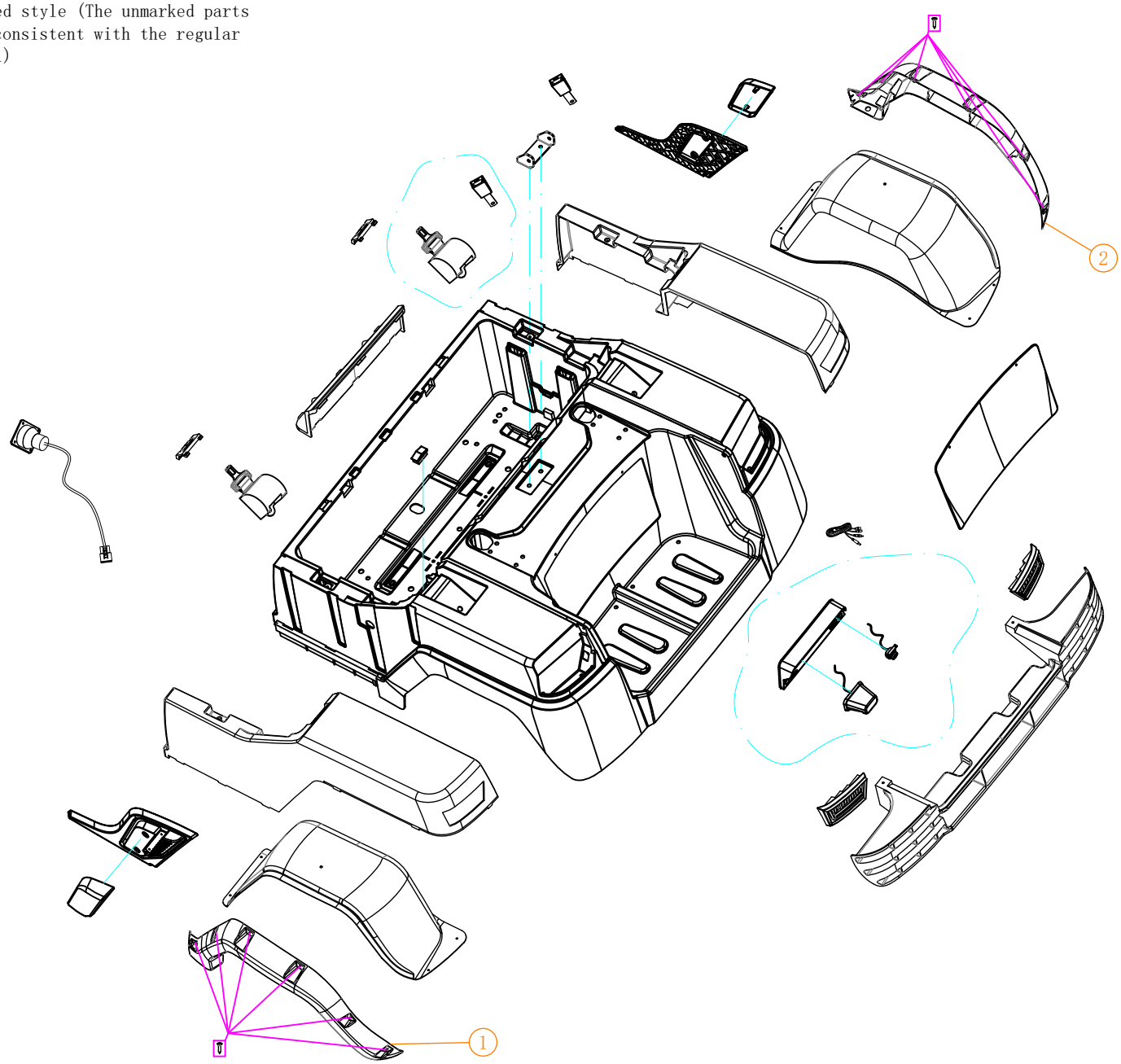

Rear body cover(2)

NO:	Code	Name	QTY	Remark
1	FF-103-PR	C727 Raise the rear wheel arches-L(Driver)	1	Injection parts
2	FF-104-PR	C727 Raise the rear wheel arches-R(Passenger)	1	Injection parts
A	HW-706-PR	(5*30) Black stainless steel wood grain round head cross screw	10	

Normal style

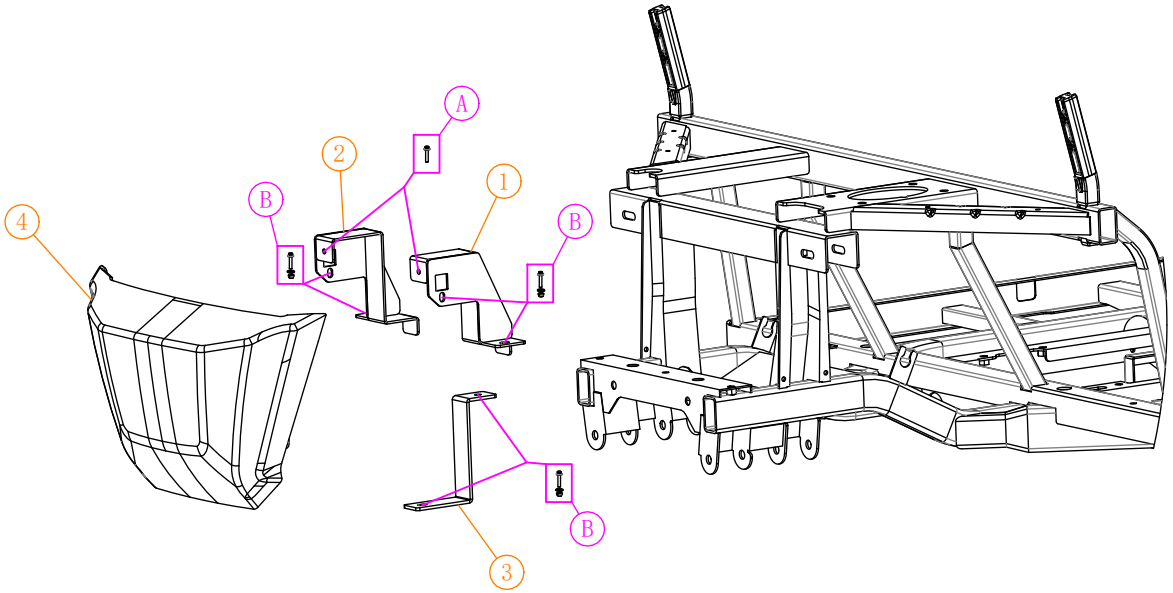

Front bumper(1)

NO:	Code	Name	QTY	Remark
1	BD-145-PR	C727 Front bumper fixing seat-L(Driver)	1	
2	BD-146-PR	C727 Front bumper fixing seat-R(Passenger)	1	
3	BD-147-PR	C727 Fixed folding plate under the front bumper	1	
4	BD-148-PR	C727 Front bumper	1	
A	HW-272-IC	(6*25) Flange screw	2	
B	HW-264-IC	(8*35) Flange screw	6	
	HW-207-IC	(1.2*8*20) Flat gasket	6	
	HW-205-IC	(M8) Flange self-locking nut	6	

Raised style

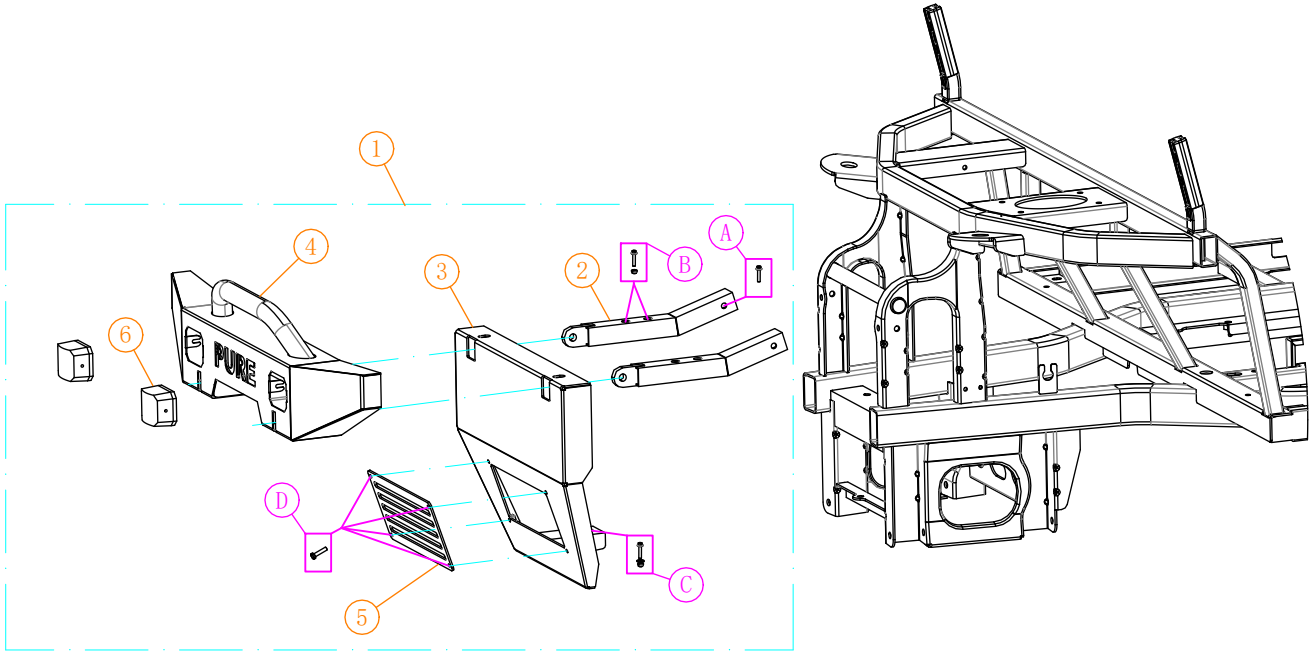

Front bumper(2)

NO:	Code	Name	QTY	Remark
1	BD-149-PR	C727 Sheet metal bumper assembly (PURE)	1	
2	BD-150-PR	C727 Sheet metal bumper fixing pipe	2	
3	BD-151-PR	C727 Sheet metal bumper lower component	1	
4	BD-152-PR	C727 Upper components of sheet metal bumper(PURE)	1	
5	BD-153-PR	A617 Sheet metal bumper decorative panel	1	
6	BD-154-PR	LED modified spotlights	2	
A	HW-502-HD	(8*45) Flange screw	2	
B	HW-251-IC	(12*50) Flange screw	2	
	HW-231-IC	(M12) Flange self-locking nut	2	
C	HW-208-IC	(8*20) Flange screw	1	
	HW-207-IC	(1.2*8*20) Flat gasket	1	
	HW-205-IC	(M8) Flange self-locking nut	1	
D	BD-155-PR	(6*20) Stainless steel hexagon screw	4	

C727.2/2G

Top roof (1)

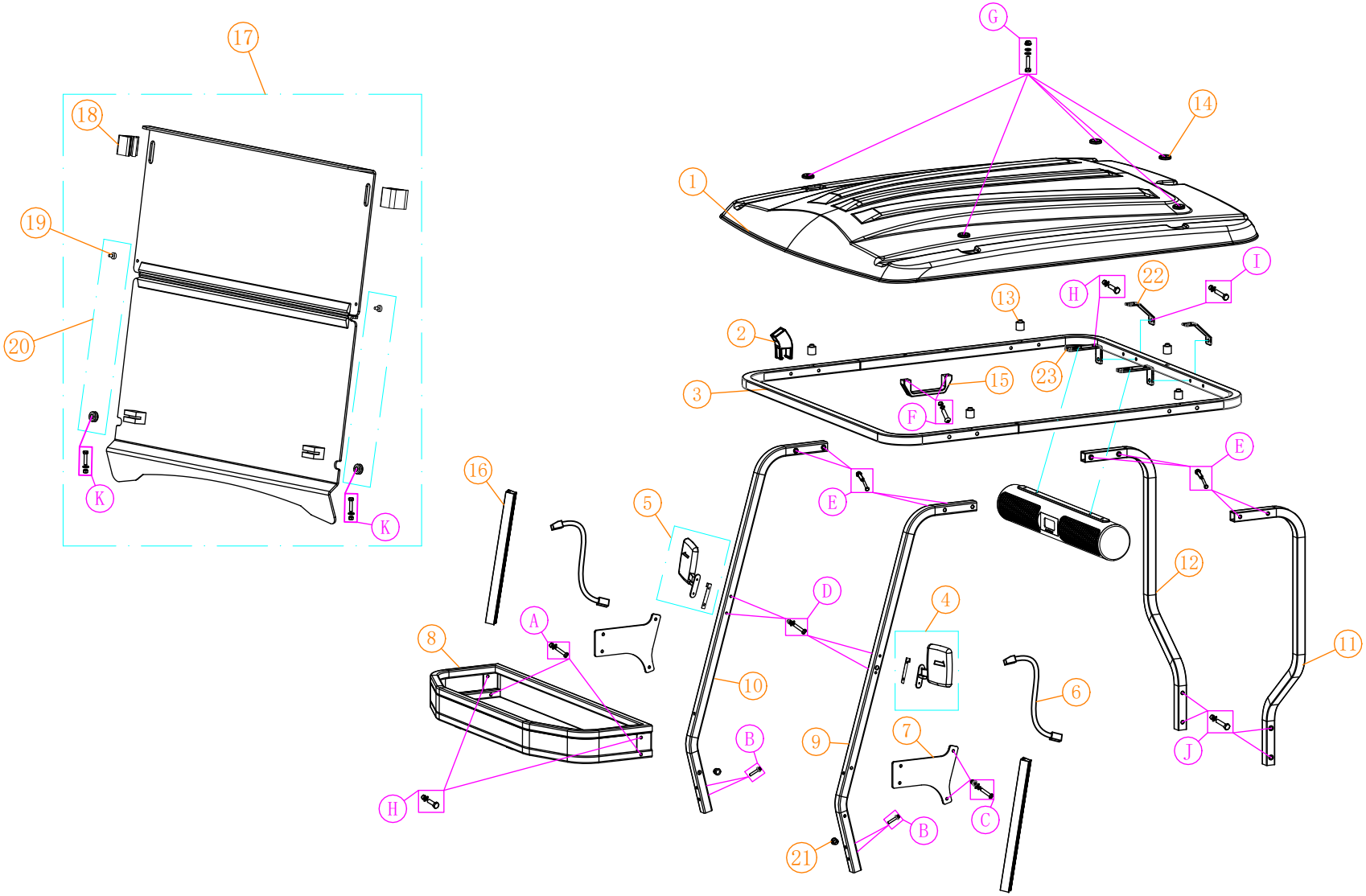

screw specifications

NO:	Code	Name	QTY	Remark
A	HW-325-IC	(8*45) Stainless steel hexagon screw	2	
	HW-207-IC	(1.2*8*20) Flat gasket	2	
	HW-299-IC	(M8) Stainless steel nut	2	
B	HW-325-IC	(8*35) Flange screw	4	
C	HW-307-IC	(M8*40) Stainless steel hexagon screw	4	
	HW-207-IC	(1.2*8*20) Flat gasket	4	
	HW-263-IC	(M8) Spring gasket	4	
	HW-712-PR	(M8) Rivet nut	4	
D	HW-309-IC	(6*45) Stainless steel hexagon screw	4	
	HW-260-IC	(1.5*6*18) Flat gasket	4	
	ST-137-ECO	M6 Stainless steel nut	4	
E	HW-311-IC	(8*50) Stainless steel hexagon screw	8	
	HW-713-PR	(M8) Outer hexagonal 30 aluminum tube step nut	8	
F	HW-403-ECO	(8*45) Hexagon socket flat round head screws	2	
	HW-207-IC	(1.2*8*20) Flat gasket	2	
	HW-299-IC	(M8) Stainless steel nut	2	
G	HW-325-IC	(8*75) Stainless steel hexagon screw	5	
	HW-207-IC	(1.2*8*20) Flat gasket	10	
	HW-299-IC	(M8) Stainless steel nut	5	
H	HW-339-IC	(8*20) Stainless steel hexagon screw	4	
	HW-207-IC	(1.2*8*20) Flat gasket	4	
	HW-299-IC	(M8) Stainless steel nut	4	
I	HW-311-IC	(8*50) Stainless steel hexagon screw	2	
	HW-207-IC	(1.2*8*20) Flat gasket	2	
	HW-299-IC	(M8) Stainless steel nut	2	

C727.2/2G

J	HW-308-IC	(8*70) Stainless steel hexagon screw	4	
	HW-207-IC	(1.2*8*20) Flat gasket	4	
	HW-299-IC	(M8) Stainless steel nut	4	
K	HW-412-ECO	(8*55) Stainless steel hexagon screw	2	
	HW-207-IC	(1.2*8*20) Flat gasket	2	
	HW-299-IC	(M8) Stainless steel nut	2	

Top roof (1)

NO:	Code	Name	QTY	Remark
1	TOP-601-PR	C727.2 Top roof	1	Inhale Molding
2	TOP-605-PR	C727 Front fixed seat of the roof	1	
3	TOP-609-PR	C727.2 top roof support	1	
4	ACS-801-PR	Ball car with light rearview mirror-L(Driver)	1	
5	ACS-802-PR	Ball car with light rearview mirror-R(Passenger)	1	
6	TOP-610-PR	Extension line for illuminated rearview mirror	2	
7	ST-909-IC	C727 Elevated front cargo basket fixing plate	2	Optional
8	ACS-803-PR	C727 Elevated front cargo basket	1	Optional
9	TOP-611-PR	C727 Front windshield bracket-L(Driver)	1	frosted matte black
10	TOP-602-PR	C727 Front windshield bracket-R (Passenger)	1	frosted matte black
11	TOP-603-PR	C7272+2 Roof rear bracket-L(Driver)	1	frosted matte black
12	TOP-604-PR	C7272+2 Roof rear bracket-R(Passenger)	1	frosted matte black
13	HW-374-IC	Top roof rubber column	5	
14	HW-373-IC	Top roof rubber collar	5	
15	TOP-521-ECO	827 Roof handle	1	Injection parts
16	WS-905-ECO	Windshield clip (with 30 aluminum square tube)	2	
17	WS-901-PR	C727 folding glass assembly	1	
18	WS-904-ECO	Glue on folding glass (with 30 aluminum square tube)	2	
19	HW-385-IC	Folding glass adhesive pad	2	
20	WS-705-IC	A627 Fold windshield rubber assy	2	
21	TOP-606-PR	SB-14 Buckle type protective wire sleeve	2	
22	TOP-607-PR	C727 Sound strengthening plate	2	
23	TOP-608-PR	C727 Sound amplifier fixing plate	2	

C727.2+2/2+2G

Top roof (2)

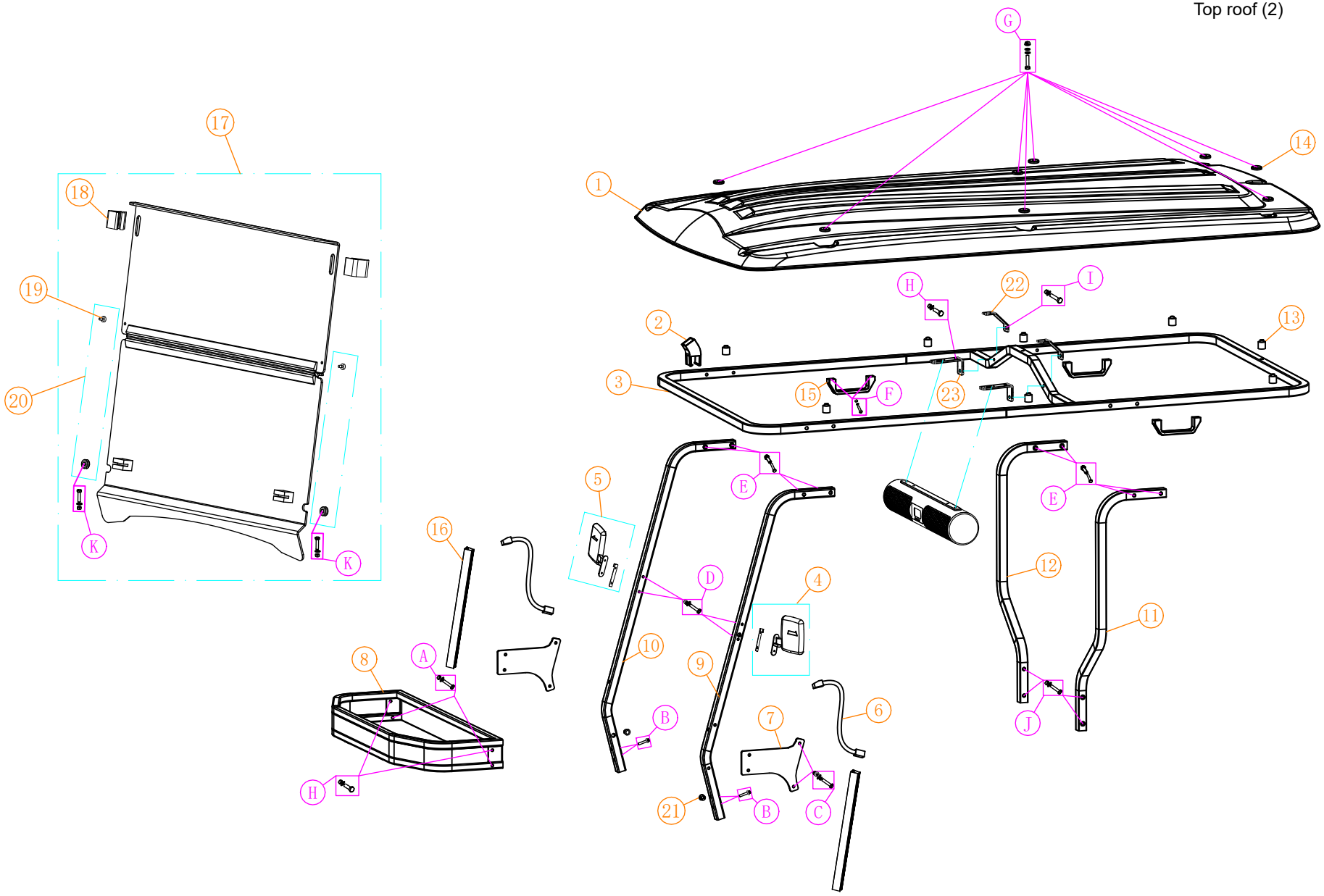

screw specifications

NO:	Code	Name	QTY	Remark
A	HW-325-IC	8*45) Stainless steel hexagon screw	2	
	HW-207-IC	（1.2*8*20） Flat gasket	2	
	HW-299-IC	M8) Stainless steel nut	2	
B	HW-325-IC	(8*35) Flange screw	4	
C	HW-307-IC	(M8*40) Stainless steel hexagon screw	4	
	HW-207-IC	（1.2*8*20） Flat gasket	4	
	HW-263-IC	(M8) Spring gasket	4	
	HW-712-PR	(M8) Rivet nut	4	
D	HW-309-IC	(6*45) Stainless steel hexagon screw	4	
	HW-260-IC	（1.5*6*18） Flat gasket	4	
	ST-137-ECO	M6 Stainless steel nut	4	
E	HW-311-IC	(8*50) Stainless steel hexagon screw	8	
	HW-713-PR	(M8) Outer hexagonal 30 aluminum tube step nut	8	
F	HW-403-ECO	(8*45) Hexagon socket flat round head screws	6	
	HW-207-IC	（1.2*8*20） Flat gasket	6	
	HW-299-IC	(M8) Stainless steel nut	6	
G	HW-325-IC	(8*75) Stainless steel hexagon screw	8	
	HW-207-IC	（1.2*8*20） Flat gasket	16	
	HW-299-IC	(M8) Stainless steel nut	8	
H	HW-339-IC	(8*20) Stainless steel hexagon screw	4	
	HW-207-IC	（1.2*8*20） Flat gasket	4	
	HW-299-IC	(M8) Stainless steel nut	4	
I	HW-311-IC	(8*50) Stainless steel hexagon screw	2	
	HW-207-IC	（1.2*8*20） Flat gasket	2	
	HW-299-IC	(M8) Stainless steel nut	2	

C727.2+2/2+2G

J	HW-308-IC	(8*70) Stainless steel hexagon screw	4	
	HW-207-IC	（1.2*8*20） Flat gasket	4	
	HW-299-IC	(M8) Stainless steel nut	4	
K	HW-412-ECO	(8*55) Stainless steel hexagon screw	2	
	HW-207-IC	（1.2*8*20） Flat gasket	2	
	HW-299-IC	(M8) Stainless steel nut	2	

Top roof (2)

NO:	Code	Name	QTY	Remark
1	TOP-612-PR	C727.4 Top roof	1	Inhale Molding
2	TOP-605-PR	C727 Front fixed seat of the roof	1	
3	TOP-613-PR	C727.2+2 canopy rack (aluminum alloy)	1	
4	ACS-801-PR	Ball car with light rearview mirror-L(Driver)	1	
5	ACS-802-PR	Ball car with light rearview mirror-R(Passenger)	1	
6	TOP-610-PR	Extension line for illuminated rearview mirror	2	
7	ST-909-IC	C727 Elevated front cargo basket fixing plate	2	Optional
8	ACS-803-PR	C727 Elevated front cargo basket	1	Optional
9	TOP-611-PR	C727 Front windshield bracket-L(Driver)	1	frosted matte black
10	TOP-602-PR	C727 Front windshield bracket-R(Passenger)	1	frosted matte black
11	TOP-603-PR	C7272+2 Roof rear bracket-L(Driver)	1	frosted matte black
12	TOP-604-PR	C7272+2 Roof rear bracket-R(Passenger)	1	frosted matte black
13	HW-374-IC	Top roof rubber column	8	
14	HW-373-IC	Top roof rubber collar	8	
15	TOP-521-ECO	827 Roof handle	3	Injection parts
16	WS-905-ECO	Windshield clip (with 30 aluminum square tube)	2	
17	WS-901-PR	C727oldable windshield	1	
18	WS-904-ECO	Glue on folding glass (with 30 aluminum square tube)	2	
19	HW-385-IC	Folding glass adhesive pad	2	
20	WS-705-IC	A627 Fold windshield rubber assy	2	
21	TOP-606-PR	SB-14 Buckle type protective wire sleeve	2	
22	TOP-607-PR	C727 Sound strengthening plate	2	
23	TOP-608-PR	C727 Sound amplifier fixing plate	2	

C727.4/4G

Top roof (3)

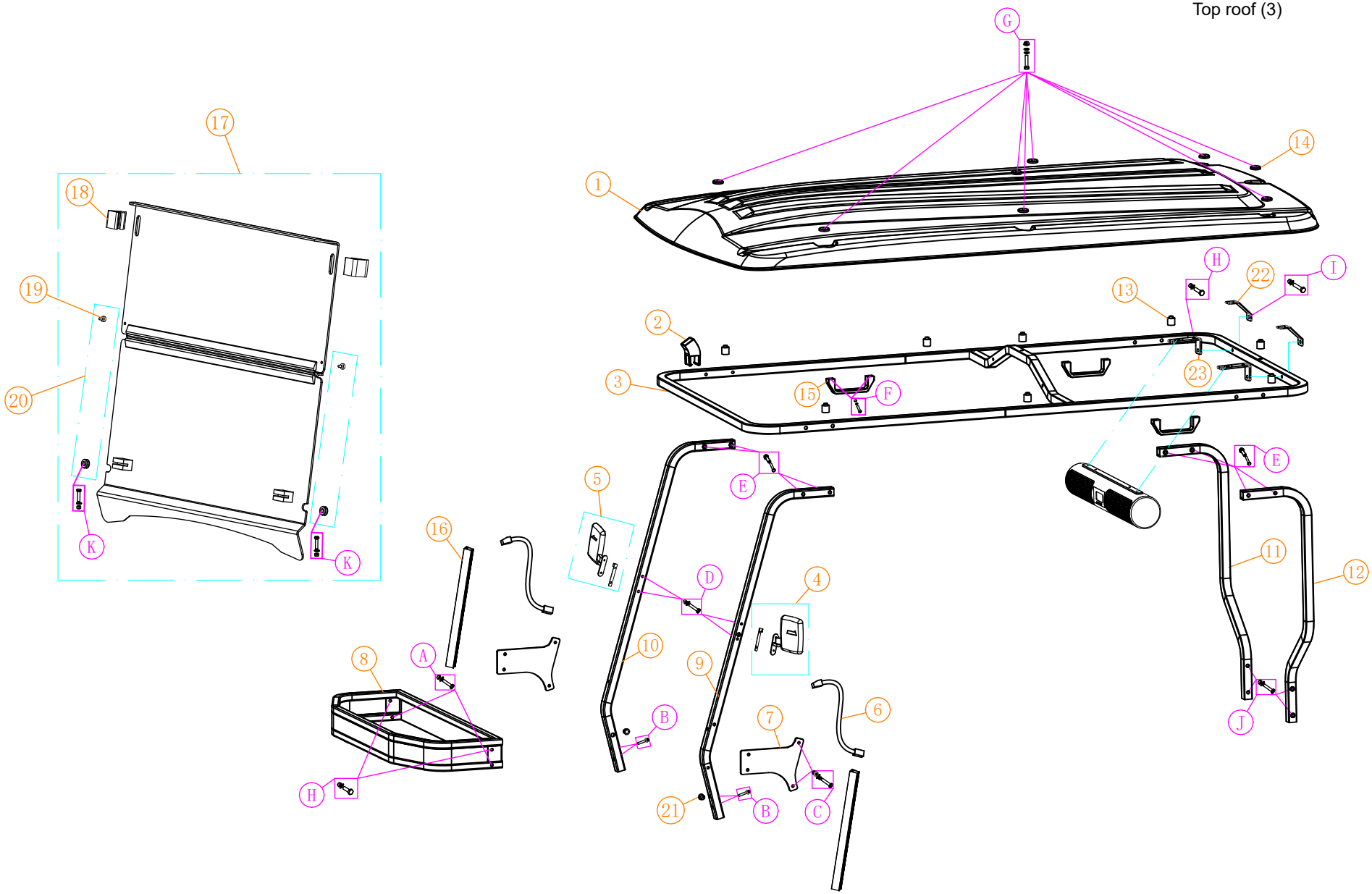

screw specifications

C727.4/4G

NO:	Code	Name	QTY	Remark
A	HW-325-IC	(8*45) Stainless steel hexagon screw	2	
	HW-207-IC	(1.2*8*20) Flat gasket	2	
	HW-299-IC	(M8) Stainless steel nut	2	
B	HW-325-IC	(8*35) Flange screw	4	
C	HW-307-IC	(M8*40) Stainless steel hexagon screw	4	
	HW-207-IC	(1.2*8*20) Flat gasket	4	
	HW-263-IC	(M8) Spring gasket	4	
	HW-712-PR	(M8) Rivet nut	4	
D	HW-309-IC	(6*45) Stainless steel hexagon screw	4	
	HW-260-IC	(1.5*6*18) Flat gasket	4	
	ST-137-ECO	M6 Stainless steel nut	4	
E	HW-311-IC	(8*50) Stainless steel hexagon screw	8	
	HW-713-PR	(M8) Outer hexagonal 30 aluminum tube step nut	8	
F	HW-403-ECO	(8*45) Hexagon socket flat round head screws	6	
	HW-207-IC	(1.2*8*20) Flat gasket	6	
	HW-299-IC	(M8) Stainless steel nut	6	
G	HW-325-IC	(8*75) Stainless steel hexagon screw	8	
	HW-207-IC	(1.2*8*20) Flat gasket	16	
	HW-299-IC	(M8) Stainless steel nut	8	
H	HW-339-IC	(8*20) Stainless steel hexagon screw	4	
	HW-207-IC	(1.2*8*20) Flat gasket	4	
	HW-299-IC	(M8) Stainless steel nut	4	
I	HW-311-IC	(8*50) Stainless steel hexagon screw	2	
	HW-207-IC	(1.2*8*20) Flat gasket	2	
	HW-299-IC	(M8) Stainless steel nut	2	
J	HW-308-IC	(8*70) Stainless steel hexagon screw	4	
	HW-207-IC	(1.2*8*20) Flat gasket	4	
	HW-299-IC	(M8) Stainless steel nut	4	
K	HW-412-ECO	(8*55) Stainless steel hexagon screw	2	
	HW-207-IC	(1.2*8*20) Flat gasket	2	
	HW-299-IC	(M8) Stainless steel nut	2	

Top roof (3)

NO:	Code	Name	QTY	Remark
1	TOP-612-PR	C727.4 Top roof	1	Inhale Molding
2	TOP-605-PR	C727 Front fixed seat of the roof	1	
3	TOP-614-PR	C727.4 canopy rack (aluminum alloy)	1	
4	ACS-801-PR	Ball car with light rearview mirror-L(Driver)	1	
5	ACS-802-PR	Ball car with light rearview mirror-R(Passenger)	1	
6	TOP-610-PR	Extension line for illuminated rearview mirror	2	
7	ST-909-IC	C727 Elevated front cargo basket fixing plate	2	Optional
8	ACS-803-PR	C727 Elevated front cargo basket	1	Optional
9	TOP-611-PR	C727 Front windshield bracket-L(Driver)	1	frosted matte black
10	TOP-602-PR	C727 Front windshield bracket-R(Passenger)	1	frosted matte black
11	TOP-603-PR	C7272+2 Roof rear bracket-L(driver)	1	frosted matte black
12	TOP-604-PR	C7272+2 Roof rear bracket-R(Passenger)	1	frosted matte black
13	HW-374-IC	Top roof rubber column	8	
14	HW-373-IC	Top roof rubber collar	8	
15	TOP-521-ECO	827 Roof handle	3	Injection parts
16	WS-905-ECO	Windshield clip (with 30 aluminum square tube)	2	
17	WS-901-PR	C727oldable windshield	1	
18	WS-904-ECO	Glue on folding glass (with 30 aluminum square tube)	2	
19	HW-385-IC	Folding glass adhesive pad	2	
20	WS-705-IC	A627 Fold windshield rubber assy	2	
21	TOP-606-PR	SB-14 Buckle type protective wire sleeve	2	
22	TOP-607-PR	C727 Sound strengthening plate	2	
23	TOP-608-PR	C727 Sound amplifier fixing plate	2	

C727.4+2/4+2G

Top roof (4)

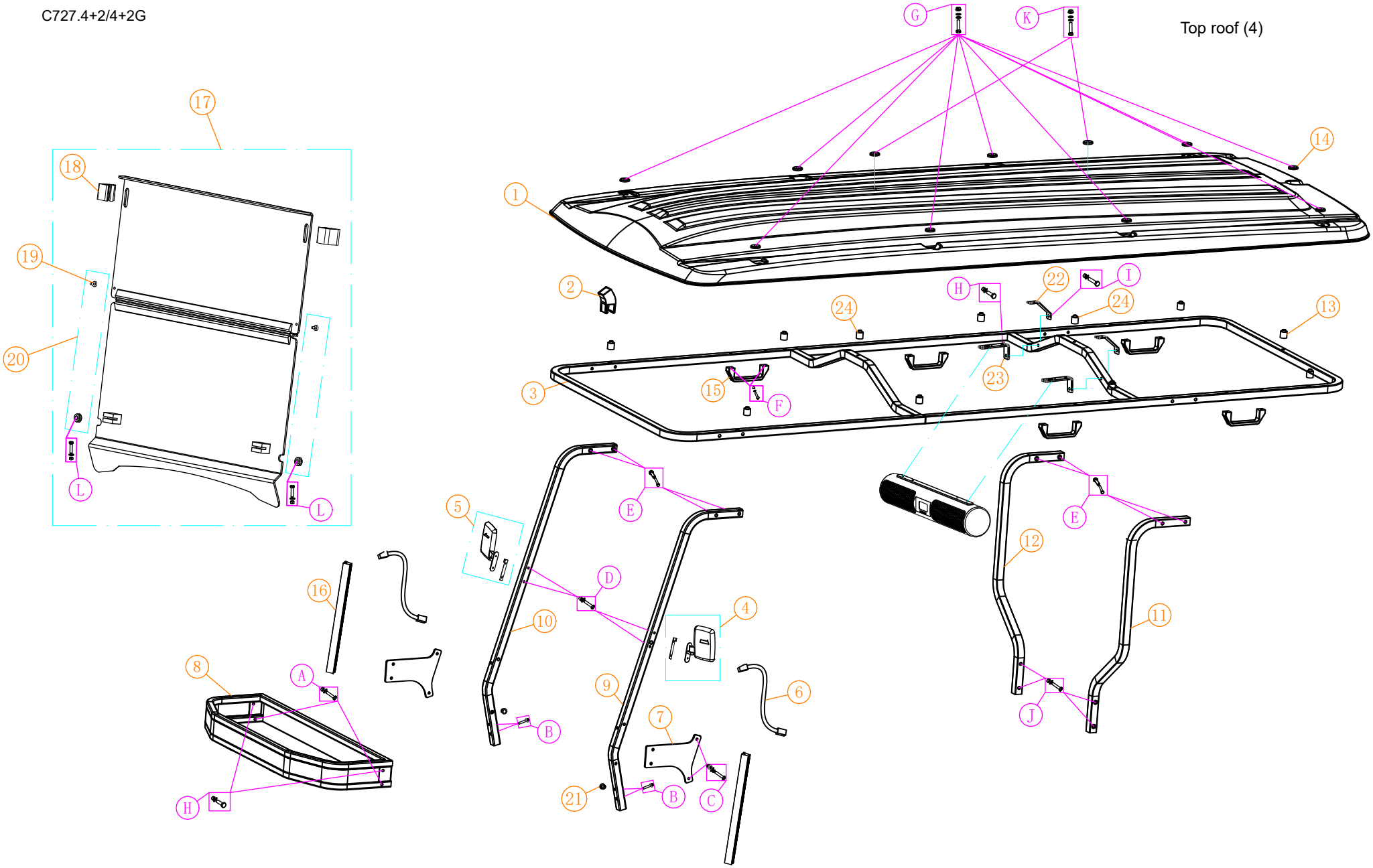

screw specifications

NO:	Code	Name	QTY	Remark
A	HW-325-IC	(8*45) Stainless steel hexagon screw	2	
	HW-207-IC	(1.2*8*20) Flat gasket	2	
	HW-299-IC	(M8) Stainless steel nut	2	
B	HW-325-IC	(8*35) Flange screw	4	
C	HW-307-IC	(M8*40) Stainless steel hexagon screw	4	
	HW-207-IC	(1.2*8*20) Flat gasket	4	
	HW-263-IC	(M8) Spring gasket	4	
	HW-712-PR	(M8) Rivet nut	4	
D	HW-309-IC	(6*45) Stainless steel hexagon screw	4	
	HW-260-IC	(1.5*6*18) Flat gasket	4	
	ST-137-ECO	M6 Stainless steel nut	4	
E	HW-311-IC	(8*50) Stainless steel hexagon screw	8	
	HW-713-PR	(M8) Outer hexagonal 30 aluminum tube step nut	8	
F	HW-403-ECO	(8*45) Hexagon socket flat round head screws	10	
	HW-207-IC	(1.2*8*20) Flat gasket	10	
	HW-299-IC	(M8) Stainless steel nut	10	
G	HW-325-IC	(8*75) Stainless steel hexagon screw	9	
	HW-207-IC	(1.2*8*20) Flat gasket	18	
	HW-299-IC	(M8) Stainless steel nut	9	
H	HW-339-IC	(8*20) Stainless steel hexagon screw	4	
	HW-207-IC	(1.2*8*20) Flat gasket	4	
	HW-299-IC	(M8) Stainless steel nut	4	
I	HW-311-IC	(8*50) Stainless steel hexagon screw	2	
	HW-207-IC	(1.2*8*20) Flat gasket	2	
	HW-299-IC	(M8) Stainless steel nut	2	

C727.4+2/4+2G

J	HW-308-IC	(8*70) Stainless steel hexagon screw	2	
	HW-207-IC	(1.2*8*20) Flat gasket	2	
	HW-299-IC	(M8) Stainless steel nut	2	
K	HW-721-PR	(8*85) Stainless steel hexagon screw	2	
	HW-207-IC	(1.2*8*20) Flat gasket	4	
	HW-299-IC	(M8) Stainless steel nut	2	
L	HW-412-ECO	(8*55) Stainless steel hexagon screw	2	
	HW-207-IC	(1.2*8*20) Flat gasket	2	
	HW-299-IC	(M8) Stainless steel nut	2	

Top roof (4)

NO:	Code	Name	QTY	Remark
1	TOP-615-PR	C727.6 Top roof	1	Inhale Molding
2	TOP-605-PR	C727 Front fixed seat of the roof	1	
3	TOP-617-PR	C727.4+2 roof rack (aluminum alloy)	1	
4	ACS-801-PR	Ball car with light rearview mirror-L(Driver)	1	
5	ACS-802-PR	Ball car with light rearview mirror-R (Passenger)	1	
6	TOP-610-PR	Extension line for illuminated rearview mirror	2	
7	ST-909-IC	C727 Elevated front cargo basket fixing plate	2	Optional
8	ACS-803-PR	C727 Elevated front cargo basket	1	Optional
9	TOP-611-PR	C727 Front windshield bracket-L(Driver)	1	frosted matte black
10	TOP-602-PR	C727 Front windshield bracket-R(Passenger)	1	frosted matte black
11	TOP-603-PR	C727.2+2 Roof rear bracket-L(Driver)	1	frosted matte black
12	TOP-604-PR	C727.2+2 Roof rear bracket-R(Passenger)	1	frosted matte black
13	HW-374-IC	Top roof rubber column	9	
14	HW-373-IC	Top roof rubber collar	11	
15	TOP-521-ECO	827 Roof handle	5	Injection parts
16	WS-905-ECO	Windshield clip (with 30 aluminum square tube)	2	
17	TOP-604-PR	C727 foldable windshield	1	
18	WS-904-ECO	Glue on folding glass (with 30 aluminum square tube)	2	
19	HW-385-IC	Folding glass adhesive pad	2	
20	WS-705-IC	A627 Fold windshield rubber assy	2	
21	TOP-606-PR	SB-14 Buckle type protective wire sleeve	2	
22	TOP-607-PR	C727 Sound strengthening plate	2	
23	TOP-608-PR	C727 Sound amplifier fixing plate	2	
24	TOP-616-PR	Top roof rubber column(φ25*32)	2	

C727.2/2+2/2G/2+2G

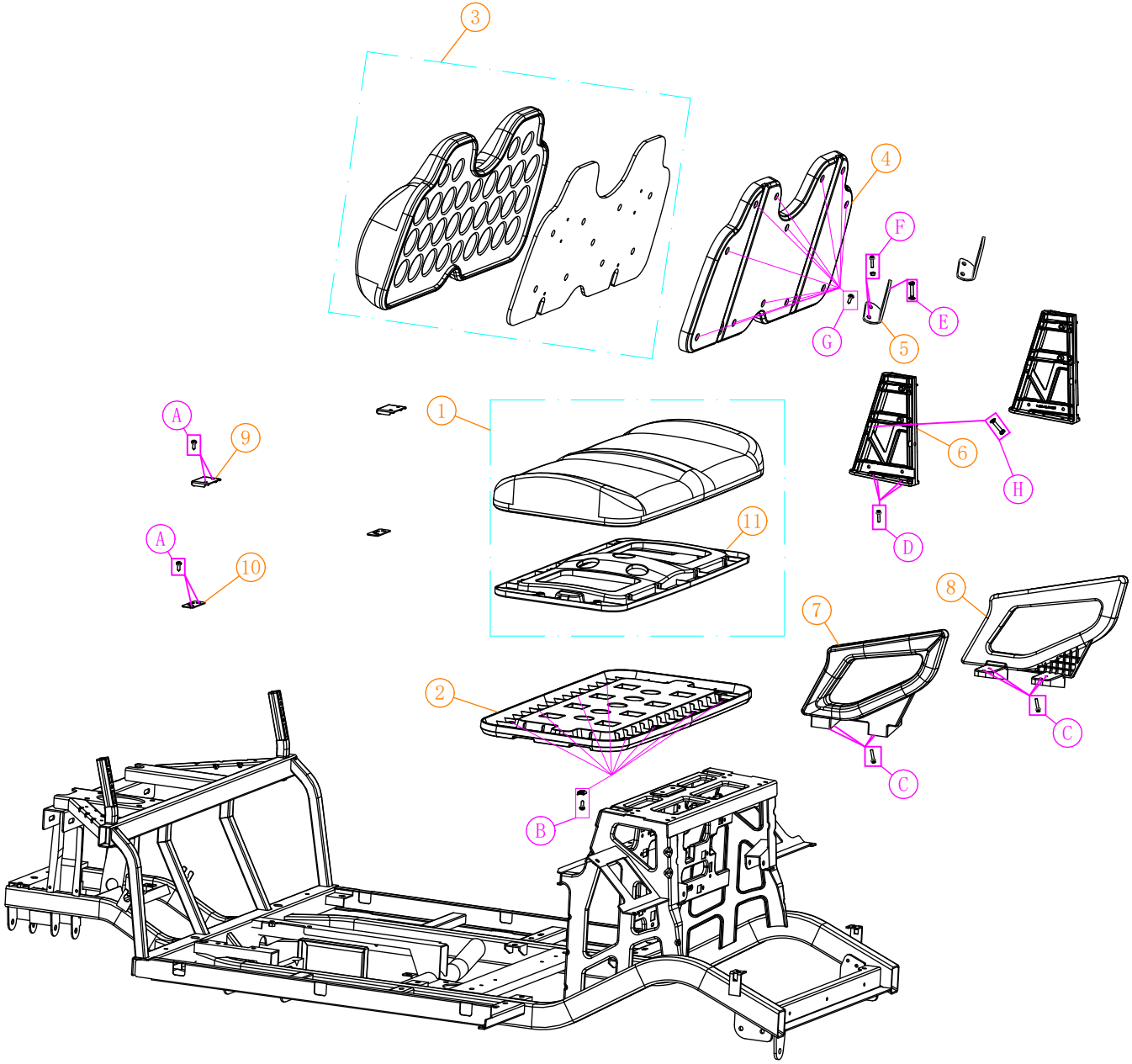

Seat parts(1)

NO:	Code	Name	QTY	Remark
1	STC-301-PR	C727.2 Cushion	1	
2	ST-202-PR	C727.2 seat cushion base plate	1	
3	ST-203-PR	C727.2 Seat back	1	棕色+棕色 (Brown) (Brown)
4	ST-204-PR	C727.2 Back cover	1	
5	ST-205-PR	C727.2 Fixed seat on backrest	2	
6	ST-206-PR	C727 Backrest bracket	2	压铸铝 Die-cast aluminum
7	ST-207-PR	C727.2 handrail-L(Driver)	1	
8	ST-208-PR	C727.2 handrail-R(Passenger)	1	
9	ST-301-ICGPR	C727 Seat cushion hinge-up	2	
10	ST-209-PR	C727 Seat cushion hinge-down	2	
11	ST-201-PR	C727.2 Seat cushion frame	1	
A	HW-281-IC	(5*16) Stainless steel large flat head Phillips tapping screw	8	
B	HW-711-PR	(5*30) Stainless steel wood grain round headPhillips screw	8	
	HW-278-IC	(M5) Flange self-locking nut	8	
C	HW-345-IC	(6*40) Flange screw	8	
D	BRAK-901-HD	(8*30) Flange screw	8	
E	HW-719-PR	(M6*30) Stainless steel hexagon screw	2	
	HW-260-IC	(1.5*6*18) Flat gasket	2	
F	HW-209-IC	(6*20) Flange screw	4	
	HW-223-IC	(M6) Flange self-locking nut	4	
G	HW-279-IC	(5*20) Stainless steel large flat head tapping screw	12	
H	HW-ECHD307	(6*50) Hexagon socket chamfer screw	2	
	HW-260-IC	(1.5*6*18) Flat gasket	2	

C727.4/4G/4+2/4+2G

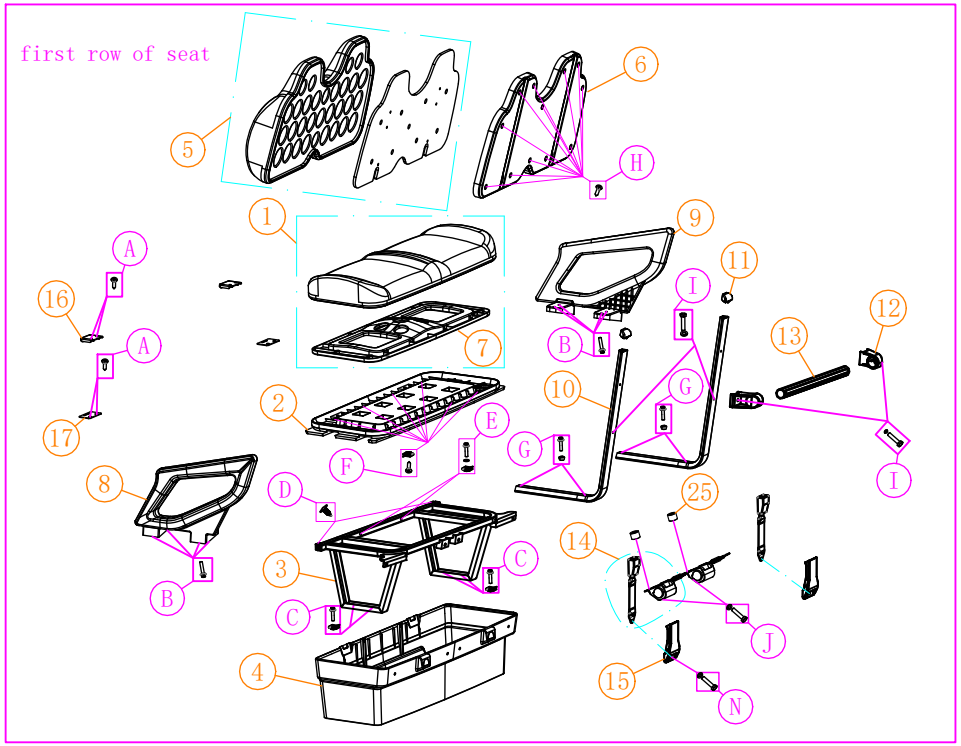

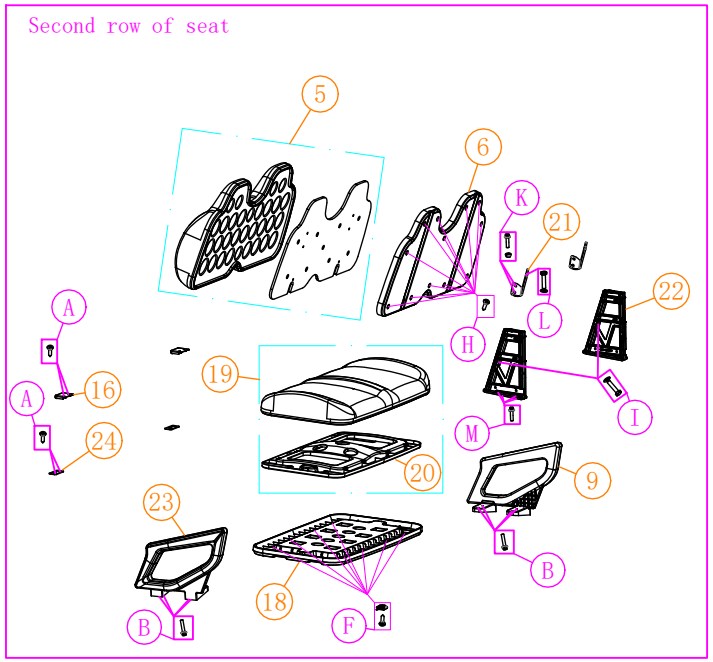

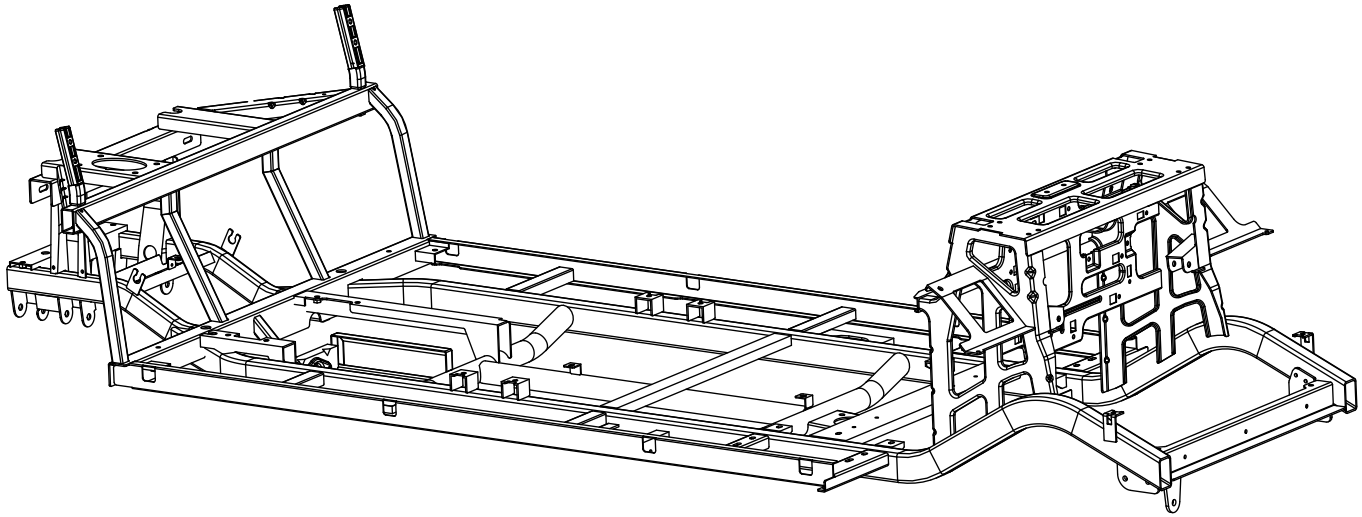

C727.4/4G/4+2/4+2G

screw specifications

NO:	Code	Name	QTY	Remark
A	HW-281-IC	（5*16）Stainless steel large flat head Phillips tapping screw	16	
B	HW-345-IC	(6*40) Flange screw	16	
C	HW-264-IC	(8*35) Flange screw	4	
	HW-ECHD305	(M8) Clip nut	4	
D	HW-214-IC	Round head plastic pull stud	2	
E	HW-276-IC	(6*35) Flange screw	2	
	HW-260-IC	（1.5*6*18） Flat gasket	2	
	HW-283-IC	(M6) Clip nut	2	
F	HW-711-PR	（5*30） Stainless steel wood grain round head Phillips screw	16	
	HW-278-IC	(M5) Flange self-locking nut	16	
G	HW-211-IC	(8*40) Flange screw	4	
	HW-205-IC	(8mm) Flange self-locking nut	4	
H	HW-279-IC	（5*20）Stainless steel large flat head tapping screw	24	
I	HW-ECHD307	(6*50) Hexagon socket chamfer screw	4	
	HW-260-IC	（1.5*6*18） Flat gasket	4	
J	HW-714-PR	(M10*40) Stainless steel hexagon screw	2	
	HW-379-IC	（2.0*10*20） Flat gasket	2	
K	HW-209-IC	(6*20) Flange screw	4	
	HW-223-IC	(M6) Flange self-locking nut	4	
L	HW-719-PR	(M6*30) Stainless steel hexagon screw	2	
	HW-260-IC	（1.5*6*18） Flat gasket	2	
M	BRAK-901-HD	(8*30) Flange screw	8	
N	ST-135-ECO	(M10*25) Stainless steel hexagon screw	2	
	HW-379-IC	（2.0*10*20） Flat gasket	2	

Seat parts (1)

NO:	Code	Name	QTY	
1	STC-302-PR	C727.4 Front seat cushion	1	
2	ST-212-PR	C727.4 Front seat cushion floor	1	
3	ST-215-PR	C727.4 Front seat bracket	1	
4	ST-216-PR	C727.4 Seat bucket	1	
5	ST-203-PR	C727.2 Back	2	(Brown)+(Brown)
6	ST-204-PR	C727.2 Backrest cover	2	
7	ST-217-PR	C727.4 Front seat cushion frame	1	
8	ST-207-PR	C727.2 handrail-L(Driver)	1	
9	ST-208-PR	C727.2 handrail-R(Passenger)	2	
10	ST-210-PR	C727.4 Front backrest bend	2	
11	ST-211-PR	827 Backrest bend plug-B	2	
12	ST-116-ECO	827 Backrest armrest installation seat	2	Injection parts
13	ST-100-ECO	827 Backrest aluminum armrest	1	
14	ST-128-ECO	Automatic locking two-point seat belt	2	
15	ST-113-ECO	827 Front seat belt guide sleeve	2	Injection parts
16	ST-301-ICGPR	C727 Seat cushion hinge-up	4	
17	HW-282-IC	A627 Seat cushion hinge-down	2	
18	ST-202-PR	C727.2 Seat cushion base plate	1	
19	STC-301-PR	C727.2 cushion	1	
20	ST-201-PR	C727.2 Seat cushion frame	1	
21	ST-205-PR	C727.2 Fixed seat on backrest	2	
22	ST-206-PR	C727 Backrest bracket	2	Die-cast aluminum
23	ST-213-PR	C727.4 handrail-L(Driver)	1	
24	ST-209-PR	C727 Seat cushion hinge-down	2	
25	ST-214-PR	Rewinder fixed cushion cover	2	

Rear seat parts(1)

C727.2+2/2+2G/4+2/4+2G

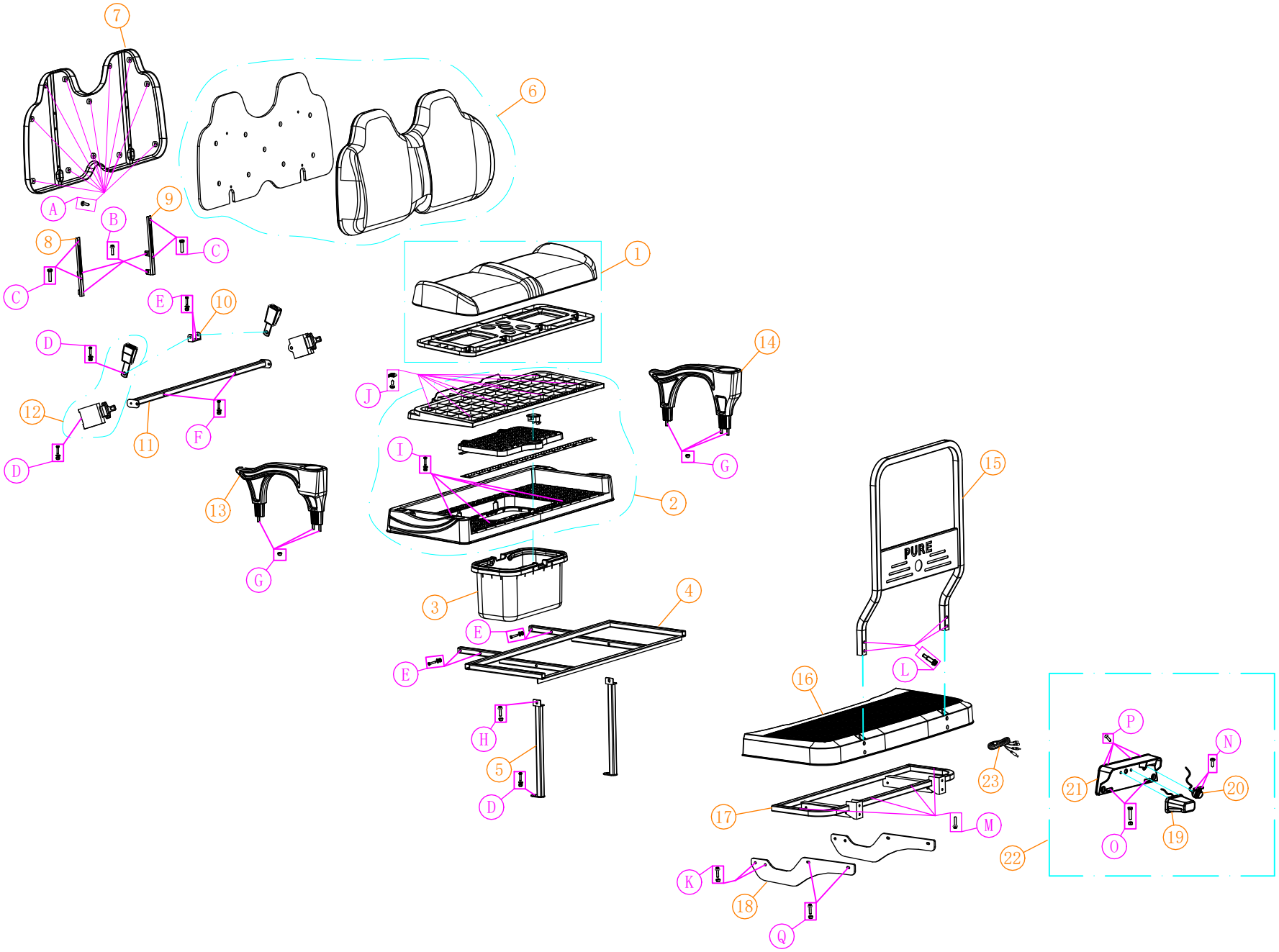

screw specifications

NO:	Code	Name	QTY	Remark
A	HW-281-IC	（5*16） Stainless steel large flat head Phillips tapping screw	12	
B	HW-345-IC	(6*40) Flange screw	4	
C	HW-285-IC	（6*40） Hexagonal stainless steel screw	4	
D	HW-262-IC	（8*25） Hexagonal stainless steel screw	4	
	HW-715-PR	（1.5*8*16） Flat gasket	4	
	HW-299-IC	(M8) Stainless steel nut	4	
E	HW-306-IC	（8*45） Hexagonal stainless steel screw	6	
	HW-715-PR	（1.5*8*16） Flat gasket	6	
	HW-299-IC	(M8) Stainless steel nut	6	
F	HW-313-IC	（8*60） Hexagonal stainless steel screw	2	
	HW-715-PR	（1.5*8*16） Flat gasket	2	
	HW-299-IC	(M8) Stainless steel nut	2	
G	HW-205-IC	(M8) Flange self-locking nut	6	
H	HW-264-IC	(8*35) Flange screw	2	
	HW-205-IC	(M8) Flange self-locking nut	2	
I	HW-311-IC	（8*50） Hexagonal stainless steel screw	4	
	HW-715-PR	（1.5*8*16） Flat gasket	4	
	HW-299-IC	(M8) Stainless steel nut	4	
J	HW-711-PR	（5*30） Stainless steel wood grain round headPhillips screw	8	
	HW-278-IC	(M5) Flange self-locking nut	8	
K	HW-707-PR	(10*25) Flange screw	4	
	HW-239-IC	(M10) Flange self-locking nut	4	
L	HW-716-PR	Outer hexagonal 30 aluminum tube shoulder bolt	4	
M	HW-204-IC	(6*45) Flange screw	4	
N	HW-710-PR	（3*14） Stainless steel wood grain flat head Phillips screw	2	

C727.2+2/2+2G/4+2/4+2G

O	HW-360-IC	(6*16) Stainless steel hexagon screw	2	Lock license plate screw
	HW-220-IC	(M6) Hexagon nut	2	lock license plate nut
P	HW-381-IC	（5*20） Phillips groove large flat head self-tapping screws	4	
Q	HW-212-IC	(8*25) Flange screw	4	
	HW-205-IC	(M8) Flange self-locking nut	4	

Rear seat parts(1)

NO:	Code	Name	QTY	Remark
1	STC-303-PR	C727 Add seat cushion	1	
2	ST-226-PR	C727 Seat bottom plate assembly	1	
3	ST-772-IC	A617 Adding a storage bucket +handle	1	Optional
4	ST-227-PR	C727 Add base frame	1	
5	ST-228-PR	C727 Add base frame support	2	
6	ST-203-PR	C727.2 Back	1	(Brown)+(Brown)
7	ST-204-PR	C727.2 Backrest cover	1	
8	ST-229-PR	C727 Add seat backrest fixed seat-L(Driver)	1	
9	ST-230-PR	C727 Add seat backrest fixed seat-R(Passenger)	1	
10	ST-764-IC	A627 Seat belt fixing folding plate	1	
11	ST-218-PR	C727 Additional seat belt fixing tube	1	
12	ST-219-PR	Automatic locking two-point seat belt	2	C727.2+2/2+2G C727.4+2/4+2G
13	ST-220-PR	C727.2 Add seat armrest-L(Driver)	1	
14	ST-221-PR	C727.2 Add seat armrest-R(Passenger)	1	
15	ST-222-PR	C727 real seat armrest	1	
16	ST-223-PR	C727 Caddy pedal	1	
17	ST-224-PR	C727 Seat pedal base	1	
18	ST-225-PR	C727 Seat pedal bracket support plate-B	2	C727.2+2/2+2G C727.4+2/4+2G
19	BD-135-PR	DOT License plate lamp	1	C727.2+2/2+2G C727.4+2/4+2G
20	BD-136-PR	Reverse camera	1	C727.2+2/2+2G C727.4+2/4+2G
21	BD-137-PR	C727 License plate light and camera fixing base	1	C727.2+2/2+2G C727.4+2/4+2G
22	BD-138-PR	C727 License plate holder assembly	1	C727.2+2/2+2G C727.4+2/4+2G
23	BD-136-PR	Reverse camera cable	1	C727.2+2/2+2G C727.4+2/4+2G

C727.2/2G/2+2/2+2G/4/4G/4+2/4+2G

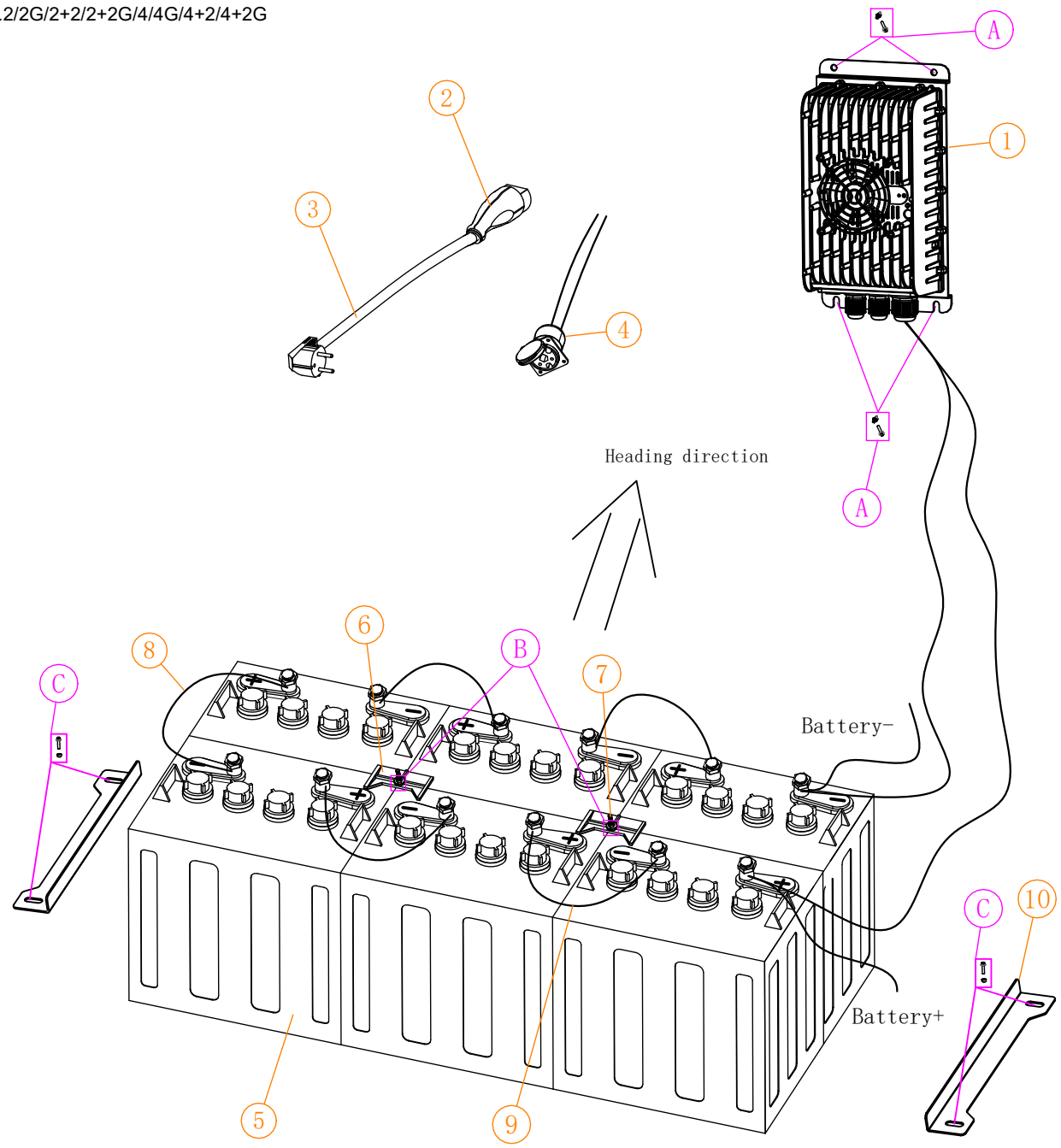

Battery system

NO:	Code	Name	QTY	Remark
1	CHGR-101-PR	ECO battery charger	1	
2	CHGR-102-PR	I - Charger plug	1	美国款32A
3	CHGR-709-IC	(KE-02) Charger power line	1	
4	BTRY-728-IC	ICON charging socket (with indicator light)	1	Contains copper core wires and special connectors
5	BTRY-731-IC	Xenike maintenance-free battery (8V)	6	Green shell
6	BTRY-602-PR	E-type battery card strip	2	
7	BTRY-732-IC	B617 battery clip screw 310	2	
8	BTRY-603-PR	Battery cable (300mm)	1	16/300mm
9	BTRY-604-PR	Battery cable (150mm)	4	16/150mm
10	BTRY-601-PR	C727 Lead acid battery baffle	2	
A	HW-219-IC	(6*16) Flange screw	4	
	HW-210-IC	(M6) Clip nut	4	
B	BTRY-207-ECO	(M6) Hexagon common nut	3	
	HW-222-IC	(1.5*6.5*26) Flat gasket	3	
C	HW-208-IC	(8*20) Flange screw	4	
	HW-205-IC	(M8) Flange self-locking nut	4	

48V green communication system

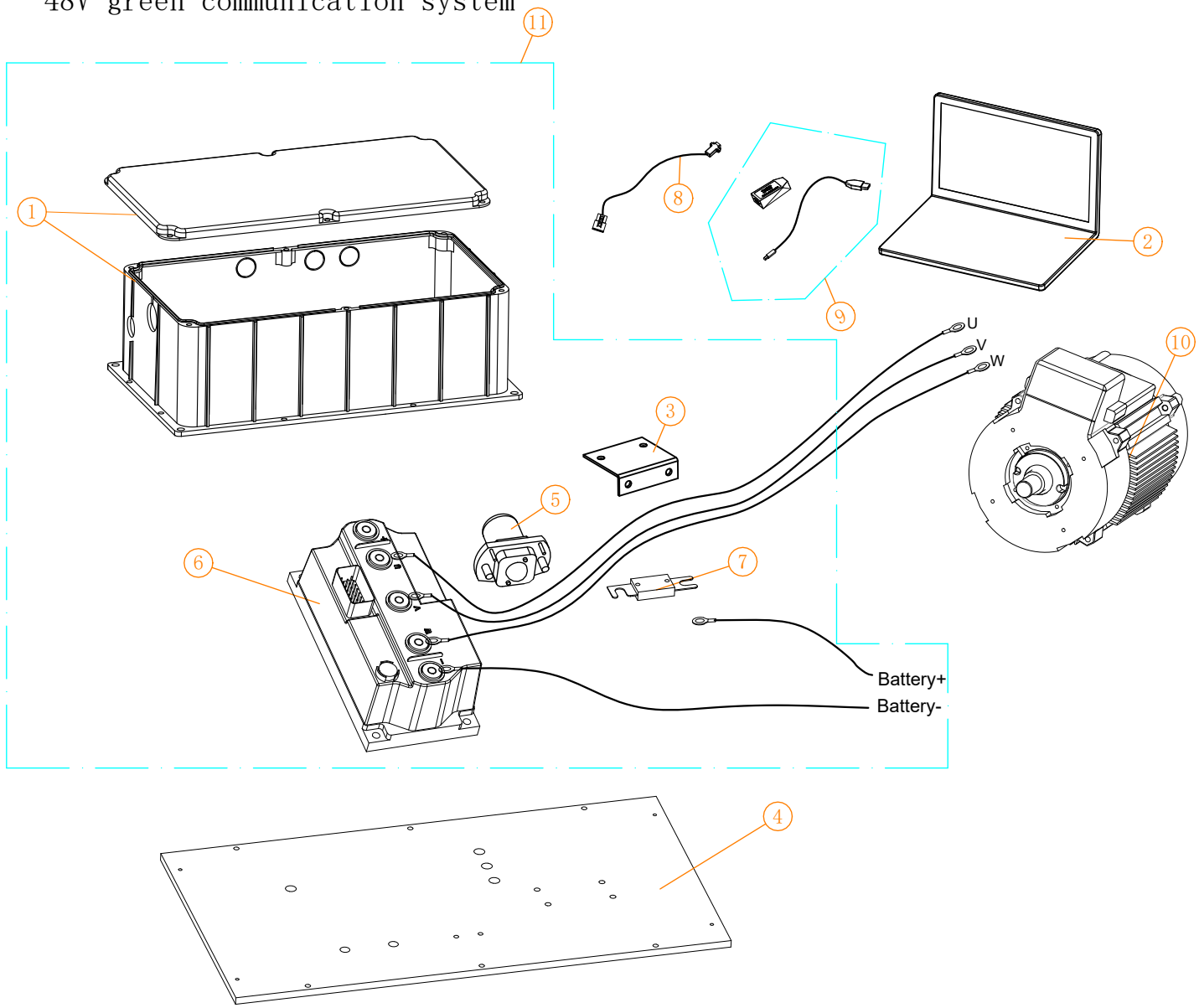

AC system(2)

NO:	Code	Name	QTY	Remark
1	CNTR-706-IC	Controller cover top-B	1	
2	BTRY-714-IC	Toyota handprogrammer	1	
3	HW-367-IC	Sensor fixed	1	
4	HW-369-IC	LT heatsink board-B	1	
5	SOLE-701-IC	48V DC contactor	1	ZJ200A
6	CNTR-712-IC	ICON AC controller 48V/350A	1	
7	ELE-714-IC	Fuse 300A	1	
8	CBL-705-IC	ICON programing CANUSB cable	1	
9	CBL-706-IC	LT programing cable without CANUSB	1	Connected to the electronic control end without CANUSB
10	MOTOR-702-IC	High efficiency three-phase asynchronous motor	1	5KW 19 teeth
11	CNTR-301-PR	Golf cart ICON electronic control assembly (450A without wiring harness)-B	1	

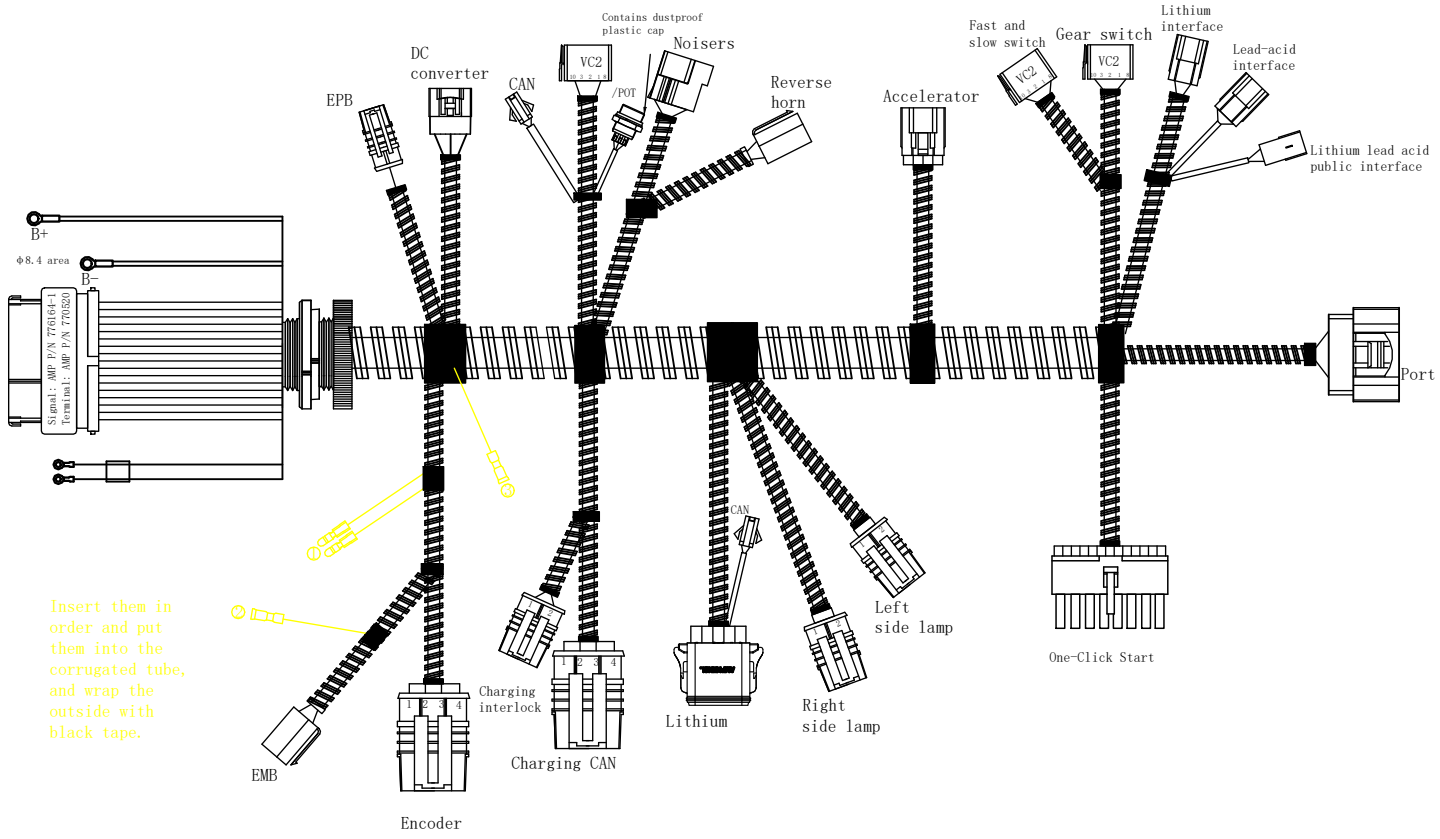

Wiring harness (1)

NO:	Code	Name	QTY	Remark
1	ELE-902-PR	C727.2 Control wiring harness	1	C727.2/2G C727.2+2/2+2G
	ELE-901-PR	C727.4 Control wiring harness	1	C727.4/4G C727.4+2/4+2G

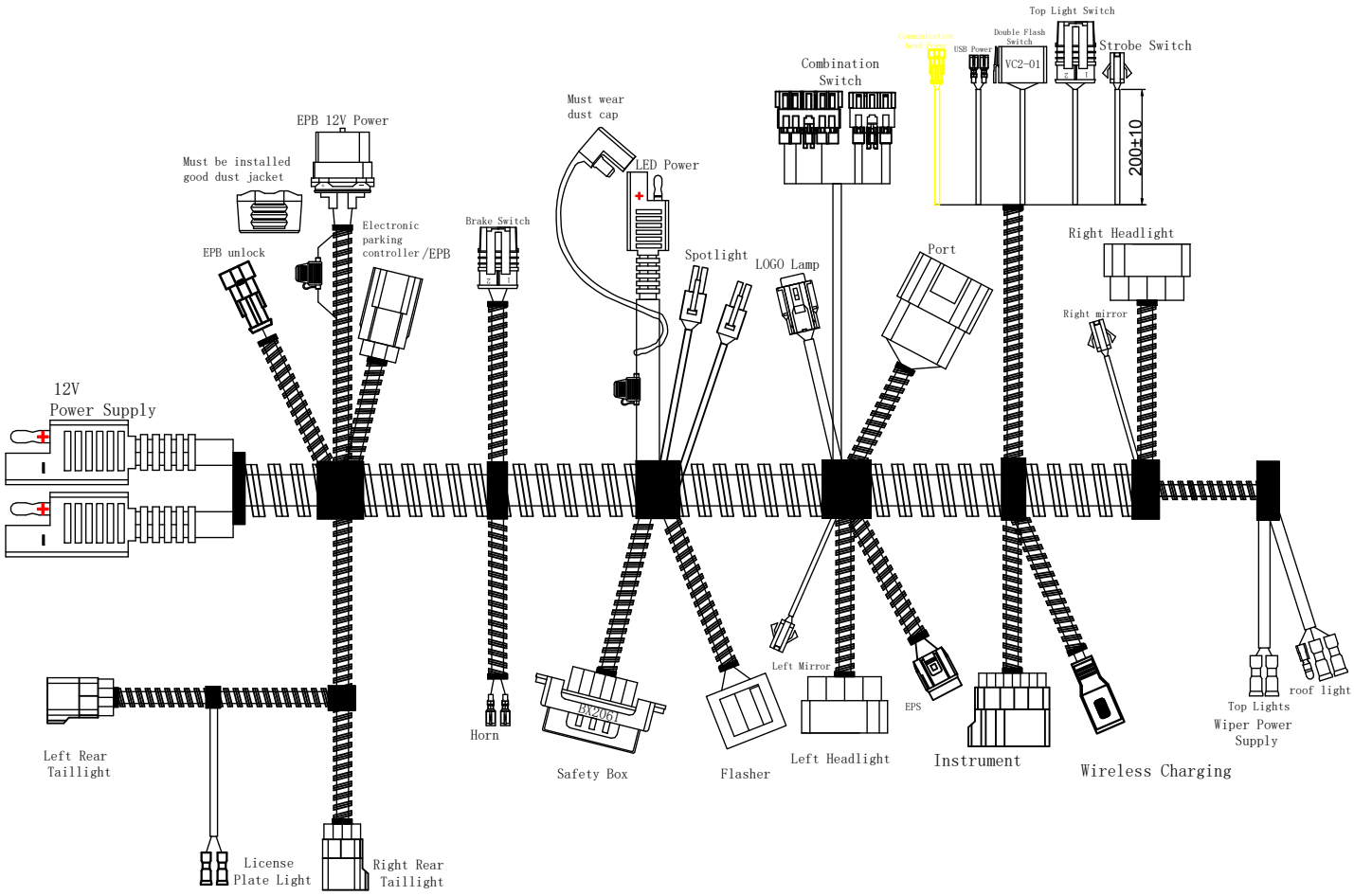

Wiring harness (2)

NO:	Code	Name	QTY	Remark
1	ELE-903-PR	C727.2 Low voltage wiring harness	1	C727.2/2G C727.2+2/2+2G
	ELE-904-PR	C727.4 Low voltage wiring harness	1	C727.4/4G C727.4+2/4+2G

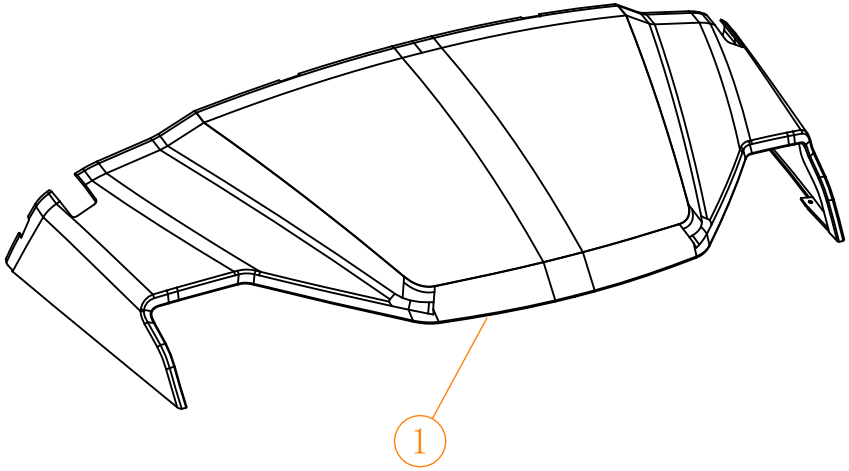

C727.Front Cover Paint color detailed

NO:	Code	Name	Remark
1	BD-160-PR	C727 Front Cover (Painted parts)	(Shiny white)
	BD-161-PR		(Shiny blue)
	BD-162-PR		(Shiny red)
	BD-163-PR		(Shiny black)
	BD-164-PR		(Sky blue)
	BD-165-PR		(Gray)
	BD-166-PR		(Blue gray)
	BD-167-PR		(Wine red)
	BD-168-PR		(Shiny ice-blue)
	BD-169-PR		(Shiny blue-green)
	BD-119-PR	C727 Front cover(Injection parts)	(Beige)

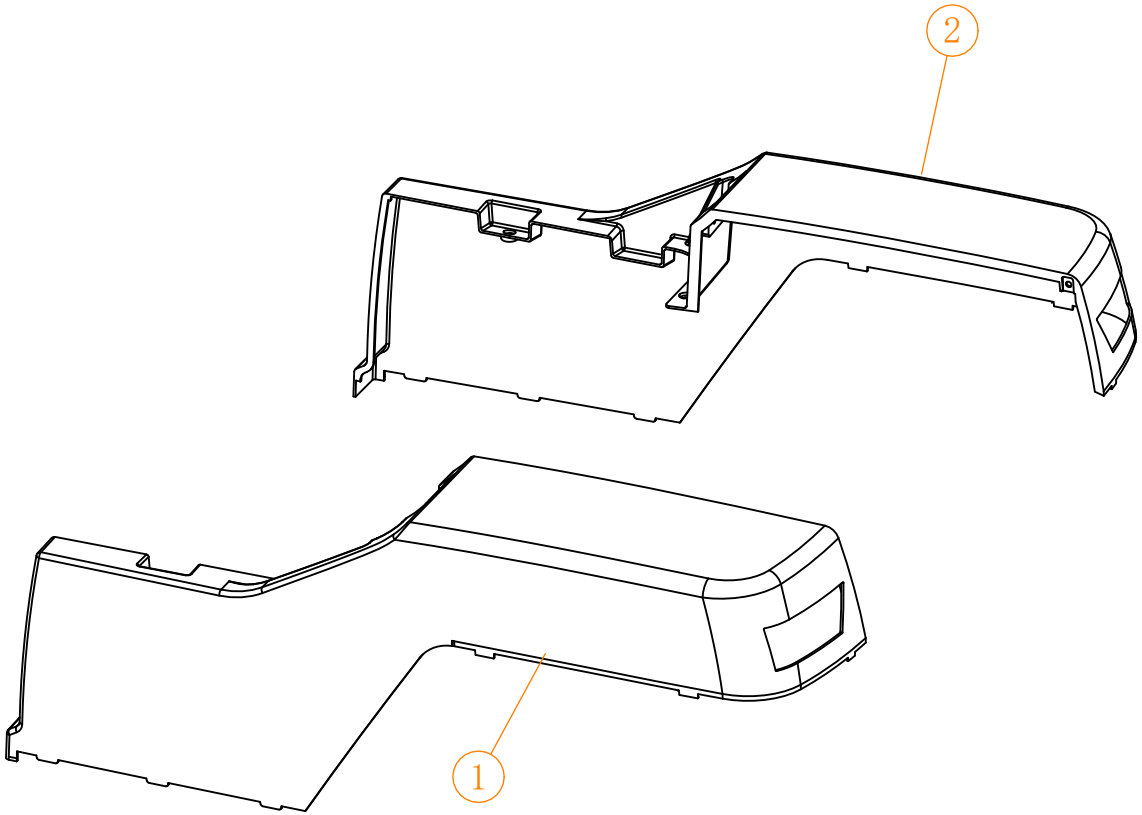

C727 Rear hood trim panel-L/R Paint color detailed

NO:	Code	Name	Remark
1	BD-172-PR	C727 Rear hood trim panel-L (Painted parts)	(Shiny white)
	BD-174-PR		(Shiny blue)
	BD-176-PR		(Shiny red)
	BD-178-PR		(Shiny black)
	BD-180-PR		(Sky blue)
	BD-182-PR		(Gray)
	BD-184-PR		(Blue gray)
	BD-202-PR		(Wine red)
	BD-187-PR		(Shiny ice-blue)
	BD-170-PR		(Shiny blue-green)
	BD-126-PR	C727 Rear hood trim panel-L (Injection parts)	(Beige)
2	BD-173-PR	C727 Rear hood trim panel-R (Painted parts)	(Shiny white)
	BD-175-PR		(Shiny blue)
	BD-177-PR		(Shiny red)
	BD-179-PR		(Shiny black)
	BD-181-PR		(Sky blue)
	BD-183-PR		(Gray)
	BD-185-PR		(Blue gray)
	BD-186-PR		(Wine red)
	BD-188-PR		(Shiny ice-blue)
	BD-171-PR		(Shiny blue-green)
	BD-127-PR	C727 Rear hood trim panel-R (Injection parts)	(Beige)

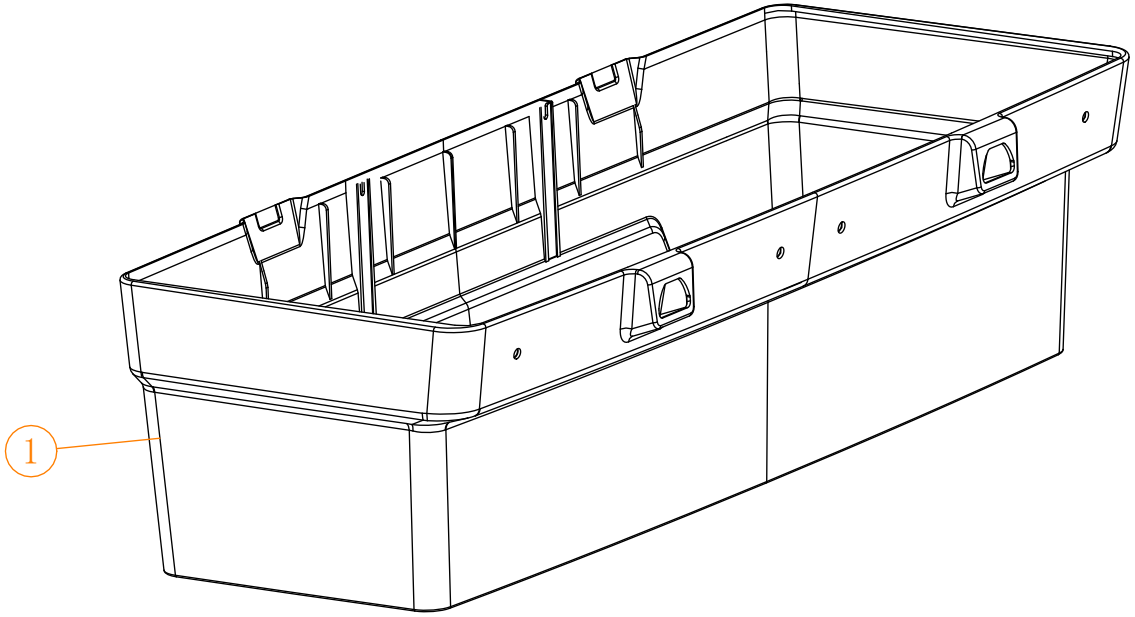

C727.4 Seat bucket Paint color detailed

NO:	Code	Name	Remark
1	BD-189-PR	C727.4 Seat bucket (Painted parts)	(Shiny white)
	BD-190-PR		(Shiny blue)
	BD-191-PR		(Shiny red)
	BD-192-PR		(Shiny black)
	BD-193-PR		(Sky blue)
	BD-194-PR		(Gray)
	BD-195-PR		(Blue gray)
	BD-196-PR		(Wine red)
	BD-197-PR		(Shiny ice-blue)
	BD-198-PR		(Shiny blue-green)
	ST-216-PR	C727.4 Seat bucket (Injection parts)	(Black)

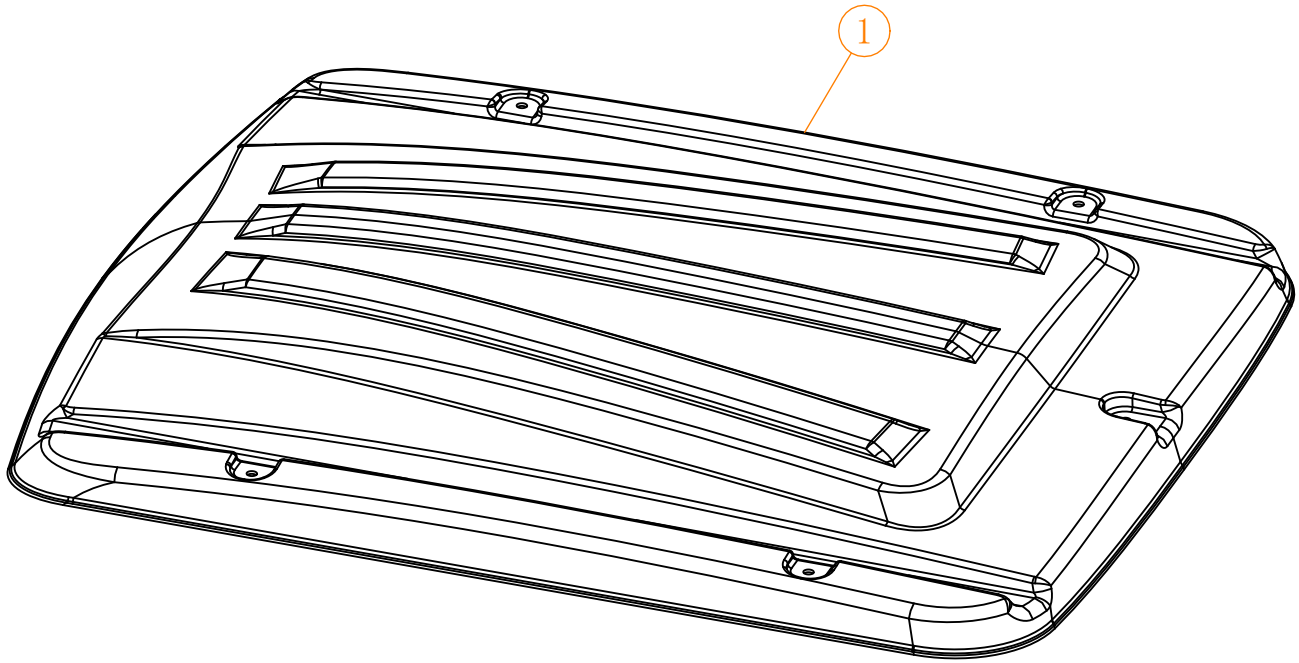

C727.2 Top roof Paint color detailed

NO:	Code	Name	Remark
1	TOP-618-PR	C727.2 Top roof (Painted parts)	(Shiny white)
	TOP-619-PR		(Shiny blue)
	TOP-620-PR		(Shiny red)
	TOP-621-PR		(Shiny black)
	TOP-622-PR		(Sky blue)
	TOP-623-PR		(Gray)
	TOP-624-PR		(Blue gray)
	TOP-625-PR		(Wine red)
	TOP-626-PR		(Shiny ice-blue)
	TOP-627-PR		(Shiny blue-green)
	TOP-601-PR	C727.2 Top roof (Inhale Molding)	(Beige)

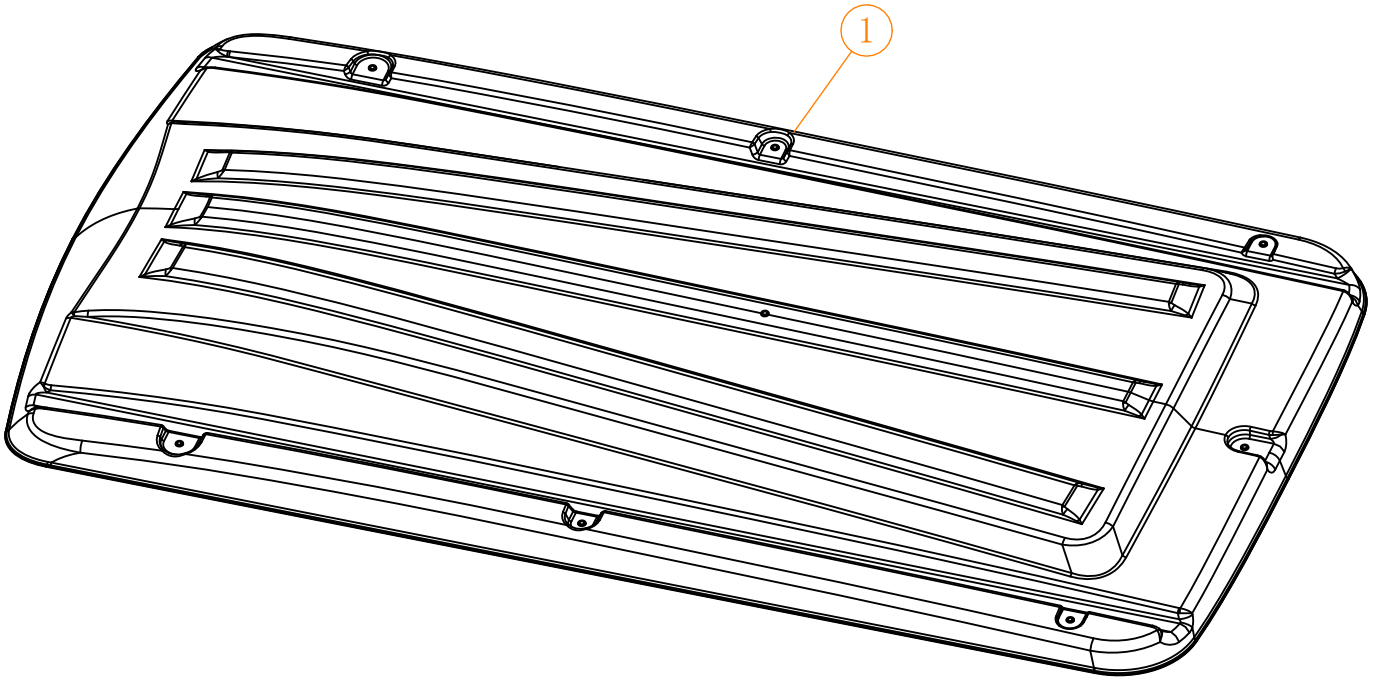

C727.4 Top roof Paint color detailed

NO:	Code	Name	Remark
1	TOP-628-PR	C727.4 Top roof (Painted parts)	(Shiny white)
	TOP-629-PR		(Shiny blue)
	TOP-630-PR		(Shiny red)
	TOP-631-PR		(Shiny black)
	TOP-632-PR		(Sky blue)
	TOP-633-PR		(Gray)
	TOP-634-PR		(Blue gray)
	TOP-635-PR		(Wine red)
	TOP-636-PR		(Shiny ice-blue)
	TOP-637-PR		(Shiny blue-green)
	TOP-612-PR	C727.4 Top roof (Inhale Molding)	(Beige)

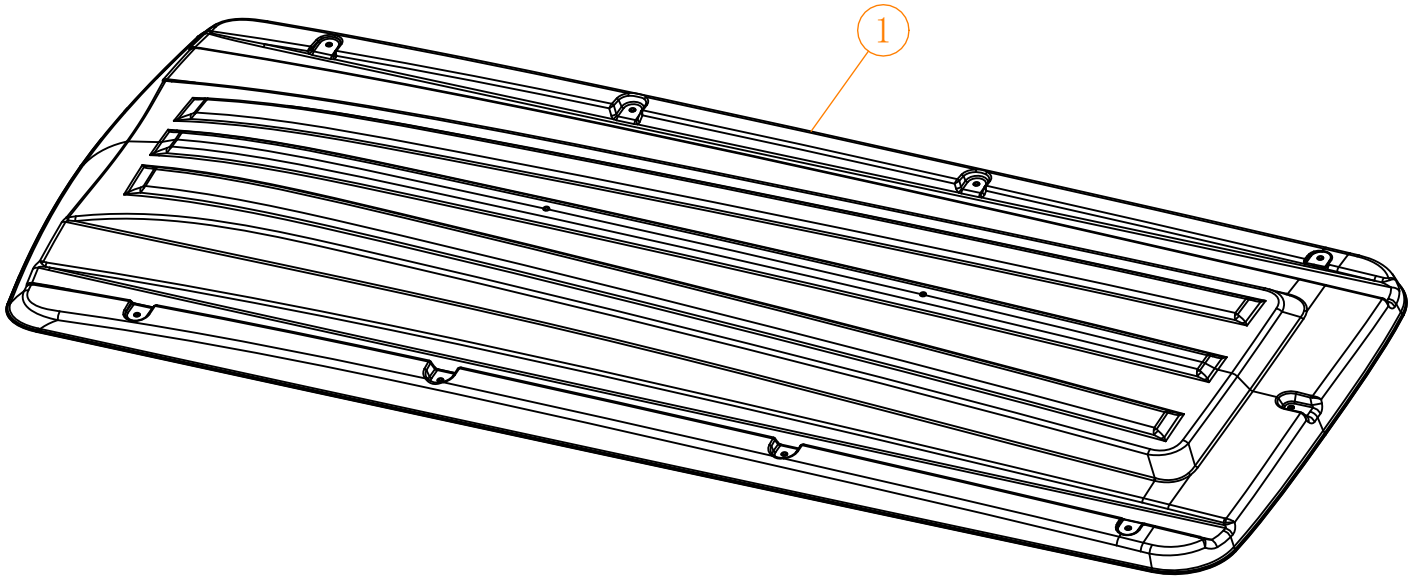

C727.6 Top roof Paint color detailed

NO:	Code	Name	Remark
1	TOP-638-PR	C727.6 Top roof (Painted parts)	(Shiny white)
	TOP-639-PR		(Shiny blue)
	TOP-640-PR		(Shiny red)
	TOP-641-PR		(Shiny black)
	TOP-642-PR		(Sky blue)
	TOP-643-PR		(Gray)
	TOP-644-PR		(Blue gray)
	TOP-645-PR		(Wine red)
	TOP-646-PR		(Shiny ice-blue)
	TOP-647-PR		(Shiny blue-green)
	TOP-615-PR	C727.6 Top roof (Inhale Molding)	(Beige)